Use of Digested Slurry from Livestock Manure in Paddy Fields and its Environmental Effect in Southeast Asia

2016

Fumiko ORITATE

Contents

CHAPTER 7

List of figures

List of tables

CHAPTER 1

Introduction

1.1 Background

Use of fossil fuels has given us comfortable life through economic growth and development of industry. However, such use has caused environmental problems such as water and air pollution and global warming by greenhouse gas (GHG) emissions at the same time. Moreover, fossil fuels are exhaustible resources, whose stock have been decreasing year after year. It is therefore important to consider a lifestyle without depending on fossil fuels. Currently, in rapid developing countries such as Southeast Asian Countries, rapid economic growth and industrialization cause rapid increase of energy demand and severe environmental problems (Samantha and Milou 2010). Main energy sources are fossil fuels with the share of 37% for oil, 21% for natural gas and 16% for coal (IEA 2013), and energy-related CO_2 emissions have increased to 1.2 gigatonnes (Gt) in 2011 in Southeast Asia (Adiarso et al. 2013). These are problems which developed countries have once experienced in advance of developing countries.

For these circumstances, a shift in the paradigm to supply sustainable energy sources by utilization of renewable energy has been proposed (Samantha and Milou 2010). Bioenergy is an attractive among renewable energies because of its properties of not only “renewable”, but also “storable and substitutive”, “abundant” and “carbon neutral” (Ogi 2002). It can contribute to a reduction in GHG emissions by substituting for fossil fuels. Moreover, it also can contribute to decrease environmental pollution such as nitrogen load in water bodies when the bioenergy source is wasted biomass. For this, wasted biomass is focused in this study.

Wasted biomass such as livestock manure and agricultural residues are abundant in rural area. Many biomass are spatially distributed thinly and widely (Sakoda 2006). Considering the cost and energy for transporting them for use, decentralized regional biomass use system is desirable. In Southeast Asian Countries, rural areas play an important role in national development because population of rural area is more than 50% of total in 2014 (FAOSTAT 2015), and ratio of agriculture in GDP is still more than 10% (except for Brunei, Myanmar, Malaysia and Singapore) (The World Bank 2015) in each of Southeast Asian Countries.

Therefore, construction of regional biomass use system (especially, wasted biomass) in

rural area would be greatly meaningful. For this, it is important to propose appropriate biomass use scenario for construction of regional biomass use system, which is particularly suitable for Southeast Asian Countries. Here, “appropriate” indicates that the scenario is adoptable both technologically and economically. The effect of adoption of the scenario should also be fully investigated.

In Southeast Asian Countries, livestock farming and rice production is popular. Therefore, the following two kinds of biomass use systems may have potential to be developed in Southeast Asia: 1) using untreated livestock manure for feedstock of household methane fermentation system called “biogas digesters”, and using generated biogas for fuel in households, and 2) using unused rice straw for feedstock of bio-ethanol, and using the bio-ethanol as substitution of fossil fuels. Biogas digesters have already been used in rural area in Southeast Asia as discussed in the following chapters. By contrast, bio-ethanol production from rice straw is still under development and many improvements are required before the system become economically feasible (Igarashi 2008; Kunimitsu and Ueda 2013) through various trials for improving the processes for conversion of rice straw to bio-ethanol (Fujita et al. 2011; Tran et al. 2013; Vu et al. 2013). Therefore, this study sets a main focus on the former scenario, namely, using untreated livestock manure for feedstock of household biogas digesters, and using generated biogas for fuel in households.

1.2 Research problem

Vietnam is selected as the study area of this study because Vietnam is a major rice producing country and also in which livestock farming is popular among Southeast Asian Countries. In Vietnam, energy demands are increasing with rapid economic growth (Pham et al. 2011; Nguyen et al. 2013), and environmental problems have become increasingly significant. It is forecasted that annual energy demands will increase by approximately 12.1% from 2010 to 2020, accompanied by yearly decreases in fossil fuel sources (Nguyen et al. 2013). Rapid economic growth has also led to rapid increases in the livestock industry with greater demands for meat products. Air pollution such as odor and pollution of aquifers and surface water caused by improper treatment of livestock excreta are becoming very serious (Vu et al. 2007; Vu et al. 2012; Thu et al. 2012).

As for rice production, the annual planted area and production are 7.9 million ha and 44 million tons, respectively (General Statistics Office Vietnam 2013). Moreover, Vietnam is known as the world's second largest exporter of rice (Ministry of Agriculture, Forestry and Fisheries of Japan 2014). By-products in rice cultivation such as rice husk and straw are estimated to be generated at approximately 60 million tons per year, but very few of them (5-7%) are used, and the rest are burned directly in the field. Although the agricultural sector occupied only 18% in GDP, more than 46% of national population are engaged in agricultural activities (General Statistics

Office Vietnam 2013). It is also characteristic in Vietnam that approximately 70% of the population is still living in rural areas (Pham et al. 2011; Nguyen et al. 2013; Sakata 2013), which indicates that rural areas have significant economical meaning for national development (Sakata 2013).

Based on these circumstances in Vietnam, the government has set targets to increase the share of renewable energy in total commercial primary energy from 3% in 2010 to 5% in 2020 and 11% in 2050 (The Prime Minister of Vietnam 2011a) and to increase the share of electricity generated from renewable resources such as wind and biomass from 3.5% of total electricity generation in 2010 to 4.5% in 2020 and 6% in 2030 (The Prime Minister of Vietnam 2011b). Among renewable energies, the government is especially interested in biomass technology improvement to take advantage of diverse local biomass resources and produce new energy for replacing fossil fuels (Nguyen et al. 2013). With the above promotions concerning energy, strategies for environmental protection have also been issued (The Prime Minister of Vietnam 2012) aiming to improve the environment in polluted and deteriorated areas, to mitigate deterioration and exhaustion of natural resources, to improve the capability of actively responding to climate change and to reduce increases in GHG emissions.

In view of such targets of the Vietnam government, it is meaningful to approach the task about biogas digesters. Therefore, this study sets a focus on biogas digesters, which are widely adopted throughout the world. In developing countries, there are currently millions of household biogas digesters (Thu et al. 2012). There are 30 million household biogas digesters in China, 3.8 million in India, 60,000 in Bangladesh (Thu et al. 2012), several hundred in the Philippines (Elauria and Elauria 2013), and an increasing number in Africa, Peru (Thu et al. 2012), Nepal (Rajendran et al. 2012) and Cambodia (Bunthoeun et al. 2013). In Vietnam, similar to the above countries, household biogas digesters have spread countrywide in rural areas, especially recently with encouragement for participation in the “biogas program for the animal husbandry sector in Vietnam” (Vietnam Livestock Production Department MARD and Netherlands Development Organization SNV 2013). This program aims to solve environmental problems such as air and water pollution caused by livestock manure, and to provide a clean and affordable energy source for the local people (Thu et al. 2012; Vietnam Livestock Production Department MARD and Netherlands Development Organization SNV 2013).

Biogas acquired from biogas digesters is mainly used as fuel for cooking, lighting and electricity. Therefore, biogas digesters provide farmers with benefits of clean energy, saved cost by substituting for fossil fuels or reduced workload to collect firewood that can be substituted by biogas. On the other hand, problems are that most digested slurry from biogas digesters is discharged to water bodies without any treatment, and only small amounts are used as fertilizer for garden trees or vegetables in fields adjacent to farmer houses and as feed for fish (Thu et al. 2012; Huong et al. 2014). Discharge of digested slurry deteriorates water quality in water bodies because

it contains high concentrations of nitrogen (Oritate et al. 2015) and fecal indicator microbes (Huong et al. 2014).

Focusing on the fertilizer components contained in digested slurry such as nitrogen, potassium and phosphorus, use in agricultural fields can be proposed as an effective solution (Yuyama et al. 2007). Especially, this study sets the main objective on applying digested slurry to the rice paddy fields. Such a selection of the objective is motivated by the facts that: 1) paddy fields occupy large areas of agricultural fields in Southeast Asian Countries, 2) most nitrogen components in digested slurry are ammonia-nitrogen compounds (Matsunaka et al. 2002), which rice prefers as a source of nitrogen (Ishii et al. 2011), and 3) paddy fields have high nitrogen removal capacity through denitrification and uptake by plants (Kyaw et al. 2005). However, the utilization of digested slurry in paddy fields in Vietnam is rarely conducted because of lack of knowledge or fear of cost for transportation and application to farmlands. Therefore, it is necessary to establish a feasible system of the use of digested slurry by evaluating it from various aspects such as fertilizer effects on rice, environmental effects, costs and labor for transportation and application to the field, and evaluation of the environmental effects at the regional level.

1.3 Objectives of this study

Based on the above discussions, this study aims to evaluate the effects of applying digested slurry to paddy fields in rural areas of rapidly developing countries in Southeast Asia by using a suburban village in Southern Vietnam as a case study area. The detailed objectives are as follows.

1. To propose sustainable regional biomass use scenarios through adopting a "regional diagnosis" approach, which is a method for constructing a material flow diagram at a regional level.
2. To evaluate the feasibility of using digested slurry in paddy fields in terms of fertilizer effects on rice, and environmental impacts such as nitrogen load and fecal contamination.
3. To evaluate the feasibility of using digested slurry in paddy fields in terms of costs for transportation and application of slurry by adopting the pouring method.

1.4 Structure of the thesis

This thesis consists of seven chapters.

Chapter 1 summarizes the current situation of energy and the environment in Southeast Asia, technologies for energy production from biomass as background of this study, and states the objectives of this study.

Chapter 2 reviews the previous studies about 1) household biogas systems in rural area of

Southeast Asia, 2) methods for analysis and evaluation for regional conditions of biomass use, 3) fertilizer effects of digested slurry on rice plants and 4) environmental effects in application of digested slurry in paddy fields and 5) transportation and application methods of digested slurry for use in paddy fields.

Chapter 3 clarifies the present conditions of biomass use in a suburban village in Southern Vietnam, in which rice cultivation and livestock farming are popular, by regional diagnosis, and indicate the necessity of treatment of untreated livestock manure and effective use of untreated digested slurry which are currently discharged to water bodies.

Chapter 4 evaluates the feasibility of using digested slurry in paddy fields in Southern Vietnam in terms of fertilizer effects on rice and environmental impacts such as nitrogen load and fecal contamination in lower water bodies through field experiments in the study area.

Chapter 5 evaluates the feasibility of using digested slurry in paddy fields in Southern Vietnam in terms of economy such as costs for transportation and application to farmlands by adopting the pouring method through field experiments in the study area.

Chapter 6 discusses possibilities of installing the system of using digested slurry from biogas digesters in a particular setting of a suburban village in Southern Vietnam, based on the results in Chapters 3 to 5. In particular, it estimates the effect of adopting it on environmental loads such as nitrogen load in water bodies and GHG emissions. It also considers a case for adding an optional biomass use system, that is, bio-ethanol production from rice straw as the case in which regional biomass use is further improved. Moreover, it proposes the diffusion of these systems throughout Southeast Asia by estimating the reduction of environmental load, and suggests the implications of the results of this study.

Chapter 7 summarizes the conclusion of this study.

References

Adiarso G, Murti W, Priyanto U (2013) Utilization of biomass for energy: prospect, challenge and industrialization strategy in Indonesia. J. Jpn. Inst. Energy. 92:89-98.

Bunthoeun P, Saoleng L, Chetra S (2013) Biodigester development to ensure sustainable agriculture and mitigate greenhouse gas emissions in Cambodia. JIRCAS Working Report. 79:65-68.

Elauria JC, Elauria MM (2013) Biomass situation in the Philippines. J. Jpn. Inst. Energy. 92:83-88.

FAOSTAT (2015) Download data – Production - Annual Production. In: FAOSTAT. Food and Agricultural Organization of the United Nations Statistics Division. http://faostat3.fao.org/download/O/OA/E. Accessed 19 November 2015

Fujita H, Qian Q, Fujii T, Mochidzuki K, Sakoda A (2011) Isolation of ethanol from its aqueous by

liquid phase adsorption and gas phase desorption using molecular sieving carbon. Adsorption. 17:869-879.

General Statistics Office Vietnam (2013) Statistical Yearbook of Vietnam 2013, Statistical Publishing House, Hanoi

Huong LQ, Madsen H, Anh LX, Ngoc PT, Dalsgard A (2014) Hygienic aspects of livestock manure management and biogas systems operated by small-scale pig farms in Vietnam. Sci. Total Environ. 470-471:53-57.

IEA (2013) Southeast Asia energy outlook. World Energy Outlook Special Report. http://www.iea.org/publications/freepublications/publication/SoutheastAsiaEnergyOutlook_WEO2013SpecialReport.pdf. Accessed 14 September 2015

Igarashi Y (2008) Overview of bioethanol. In: Igarashi Y and Saiki T (eds) Bio-ethanol production from rice straw. JARUS, Tokyo, Japan

Ishii S, Ikeda S, Minamisawa K, Sendo K (2011) Nitrogen cycling in rice paddy environments: past achievements and future challenges. Microbes Environ. 26(4):282-292.

Kunimitsu Y, Ueda T (2013) Economic and environmental effects of rice-straw bioethanol production in Vietnam. Paddy Water Environ. 11:411-421.

Kyaw, KM, Toyoya K, Okazaki M, Motobayashi T, Tanaka H (2005) Nitrogen balance in a paddy field planted with whole crop rice (Oryza sative cv. Kusahonami) during two rice growing seasons. Biol. Fertil. Soils. 42:72-82.

Matsunaka T, Naruse M, Kumai M (2002) Change in nutrients content and some other properties of dairy cattle slurry following anaerobic digestion. Jpn. J. Soil Sci. Plant Nutr. 73(3):297-300.

Ministry of Agriculture, Forestry and Fisheries of Japan. (2014) http://www.maff.go.jp/j/council/seisaku/ syokuryo/140326/pdf/sankou_siryo2-4.pdf. Accessed 13 November 2014.

Nguyen KT, Nguyen HH, DOAN TH, Tran DM (2013) Biomass potentials in Vietnam; current status and prospects for biofuel development. J. Jpn. Inst. Energy. 92:99-105.

Ogi T (2002) Definition and classification of biomass. In: Japan Institute of Energy (ed) Biomass Handbook, Ohm-sha, Tokyo. Japan

Oritate F, Yuyama Y, Nakamura M, Yamaoka M, Nguyen PD, Dang VBH, Mochidzuki K, Sakoda A (2015) Regional diagnosis of biomass use in suburban village in Southern Vietnam. J. Jpn. Inst. Energy, 94:805-829.

Pham KT, Nguyen MB, Nguyen HD (2011) Energy, supply, demand, and policy in Vietnam, with future projections. Energy Policy. 39:6814-6826.

Rajendran K, Aslanzadeh S, Taherzadeh MJ (2012) Household biogas digesters-A review. Energies. 5:2911-2942.

Sakata S (2013) Agriculture and rural areas in Vietnam under the rapid economic growth-“New

stage" of development for agriculture and rural are in Vietnam-. In: Sakata S (ed) Development of agriculture and rural area in Vietnam under the rapid economic growth. IDE-JETRO Institute of Developing Economies, Chiba, Japan

Sakoda A (2006) Toward the holistic use of biomass resources (8)-future prospects for biomass utilization system-. Jour. JSIDRE 74(1):53-58.

Samantha O, Milou B (2010) Deploying renewables in Southeast Asia-Executive summary. IEA Working paper. https://www.iea.org/publications/freepublications/publication/Renew_SEAsia.pdf. Accessed 14 September 2015

The Prime Minister of Vietnam (2011a) Decision No. 2139/QD-TTg, National strategy on climate change

The Prime Minister of Vietnam (2011b) Decision No. 1208/2011/QD-TTg, Approving the national master plan for power development in the 2011-2020 period, with considerations to 2030

The Prime Minister of Vietnam (2012) Decision No. 1216/QD-TTg, The National Strategy on Environment Protection to 2020, with Visions to 2030

The World Bank (2015) Data – Agriculture, value added (% of GDP). The World Bank Group. http://data.worldbank.org/indicator/NV.AGR.TOTL.ZS/countries. Accessed 19 November 2015

Thu CTT, Cuong PH, Hang LT, Chao NV, Anh LX, Trach NX, Sommer SG (2012) Manure management practices on biogas and non-biogas pig farmers in developing countries-using livestock farms in Vietnam as an example. J. Cleaner Prod. 27:64-71.

Tran UPN, Vu KLV, Nguyen QD, Le PTK, Phan TD, Mochidzuki K, Kobayashi S, Seo DJ, Sakoda A (2013) Energy balance of small-scale biorefinery system. Environ. Sci. 26(6):489-496.

Vu TKV, Tran MT, Dang TTS (2007) A survey of manure management on pig farms in Northern Vietnam. Livest. Sci. 112:288-297.

Vu, QD, Tran TM, Nguyen PD, Vu CC, Vu VTK, Jensen LS (2012) Effect of biogas technology on nutrient flows for small and medium scale pig farms in Vietnam. Nutr. Cycl. Agroecosyst. 94:1-13.

Vu LVK, Tran PNU, Le TKP, Seo DJ, Nguyen DQ, Mochidzuki K, Phan DT, (2013) Agriculture residues as alternative supplemental nutrients for bioethanol fermentation process from rice straw. J. Sci. and Technol., Vietnam. 51(5B):32-36.

Vietnam Livestock Production Department MARD and Netherlands Development Organization SNV (2013) Biogas program for the animal husbandry sector in Vietnam. http://www.biogas.org.vn/ english/Home.aspx. Accessed 20 August 2013

Yuyama Y, Nakamura M, Yamaoka M (2007) Technologies to use the digested liquid produced by methane fermentation. Trans. of JSIDRE. 247:119-129.

CHAPTER 2

Literature review

2.1 Household biogas systems in rural area of Southeast Asia

Methane fermentation is a biochemical process to decompose organic wastes into CH_4 and CO_2 under anaerobic conditions by metabolic processes of microorganisms (Li 2005). Ratios of CH_4 and CO_2 in biogas obtained by methane fermentation are approximately 60% and 40%, respectively, and calorific values of biogas are generally 5,000-6,000 kcal (21-25 MJ) per 1 Nm^3 (Li 2005). Methane fermentation can be classified into non-heating fermentation (< 25C°), mesophilic fermentation at approximately 35C° (30-40C°), and thermophilic fermentation at approximately 55C° (50-60C°). Comparing the aspects of treatment properties of the latter two types of fermentation reveals that, thermophilic fermentation is advantageous because of a high hydrolysis rate, high death rate of pathogens and high fermentation speed, despite a disadvantage with the easy accumulation of organic acids. In contrast, mesophilic fermentation is advantageous because of high stability despite a low degradation speed (Li 2005). Methane fermentation is carbon neutral, and can use various kind of wasted biomass such as sewage sludge, garbage and livestock wastes as feedstock, providing significant implications for global environmental conservation (Noike 2009).

"Methane fermentation technology" is a technology to biologically decompose wasted biomass by the principle of methane fermentation, and collect and use the product CH_4 as an energy resource. Therefore, "methane fermentation technology" is also called "Biogas Technology" (Li 2005). Biogas technology has the following advantages (Thu et al. 2012; Nguyen 2005); 1) reduces the GHG emissions from manure, 2) produces renewable energy, 3) reduces the workload for farmers to collect firewood for cooking in rural areas, 4) reduces deforestation, and 5) improves the surrounding environment by reducing odors and pathogens.

There are currently millions of household biogas digesters (Thu et al. 2012) as mentioned in Chapter 1. There are several types of biogas digesters, and currently the most popular type in rural areas around Ho Chi Minh City is the fixed dome type made from solid bricks and mortar, and buried underground as shown in Figure 2-1. There are three main components continuously connected; (i) inlet tank where pig manure is mixed with water before it is discharged into the digester; (ii) digester where the mixture of pig manure and water is fermented to produce methane

and other gases; (iii) compensating tank that collects excess slurry effluent from the digester (Nguyen et al. 2012). Average size of a digester is approximately 8 m^3, the capacity to make a profit with biogas generated from the manure of 15-20 head of pigs or 4-6 head of milk cows (Information acquired by Interviews of Department of Agriculture and Rural Development, Ho Chi Minh City (DARD-HCMC) in 2010). Incidentally, polyethylene tube biogas digesters as shown in Figure 2-2 are popular in the Mekong Delta Region (Yamada 2008; Nguyen et al. 2012) because they are low cost, easy to install and applicable to the regions where the ground water level is high (Nguyen et al. 2012) because their shapes mean they can be installed without deep excavation of the ground (Figure 2-2). A reduction of more than 1,000 t-CO_2 per year was achieved with introduction of polyethylene tube type biogas digesters in 961 households of a village in the Mekong Delta by the Clean Development Mechanism (CDM) Project (Matsubara et al. 2014; Izumi et al. 2013).

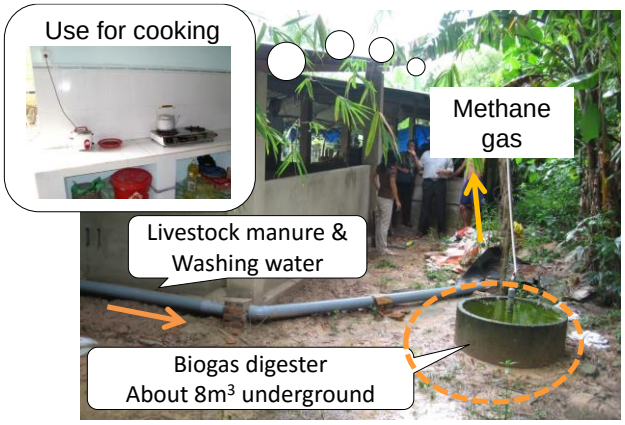

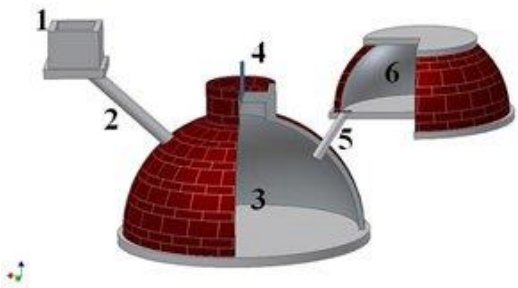

1. Mixing tank, 2. Inlet pipe, 3. Digesting tank, 4. Dome-gas pipe, 5. Outlet pipe, 6. Compensation tank (Source: http://biogas.org.vn/english/Introduction/Technology.aspx)

Figure 2-1 Fixed dome type of household biogas digester

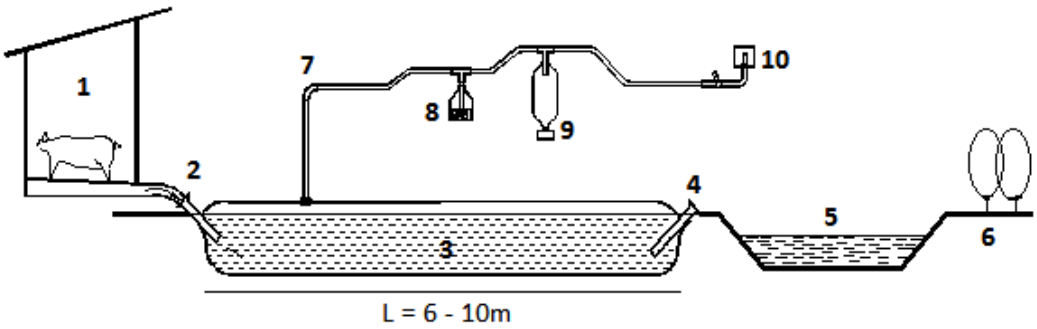

1 - Pig-pen; 2 - Inlet pipe; 3 - Digester; 4 - Outlet pipe; 5 -Discharge pond; 6 - Garden;
7 - Gas vent; 8 - Security valve; 9 PE gas-holder; 10 - Stove
(Source: Nguyen et al. 2012)

Figure 2-2 Polyethylene tube biogas digester

Biogas from biogas digesters is mainly used as fuel for cooking, lighting and electricity. On the other hand, most digested slurry from biogas digesters is discharged to water bodies without any treatment, only small amounts are used as fertilizer for garden trees or vegetables in fields adjacent to farmer houses and as feed for fish (Thu et al. 2012; Huong et al. 2014). The Mekong Delta Region is an exception because specific material flow called VACB systems (Vuon=garden; Ao=pond; Chuong=pigsty; B=biogas digester) (Yamada 2008) is formed, and most of the digested slurry is used as feed for fish. Discharge of digested slurry deteriorates water quality in water bodies because high concentrations of nitrogen (Oritate et al. 2015) and fecal indicator microbes (Huong et al. 2014) are confirmed in digested slurry. Focusing on the fertilizer components contained in digested slurry, use in agricultural fields can be proposed as an effective solution (Yuyama et al. 2007). Especially, the feasibility of utilization of digested slurry in paddy field is significant as mentioned in Chapter 1. However, the utilization of digested slurry in paddy fields in Vietnam is rarely conducted, and needed the investigation to evaluate the feasibility.

2.2 Methods for analysis and evaluation of regional conditions of biomass use

Quantitative clarification of the material flow related to biomass use in the objective region is important to propose appropriate biomass use plan. “Material Flow Analysis” established by Brunner and Rechberger (2004) is well known as a similar study that assessed the environmental impacts of human activities on nutrient flow (Do et al. 2013). In Japan, the nitrogen flow analysis established by Matsumoto (2000) focusing on compartments of “farmland”, “animal” and “human” based on statistical data is well known as a forerunner for this kind of study. Based on the methods of Matsumoto (2000), Yuyama (2005) developed a method called “regional diagnosis” for estimating circulation of regional biomass. “regional diagnosis” aims to clarify the sustainability and soundness of a biomass use plan based on accurate understanding of the present conditions of the material flow of biomass use in the objective area, and compares several ideas in terms of selection of feedstock biomass, biomass conversion process, scale and disposition of biomass conversion facilities (Yuyama 2005).

For the purpose of “regional diagnosis”, the “Diagnosis Model for Biomass Resources Circulative Use” was developed by Yuyama (2004). Structure of it is similar to the concept of “Material Flow Analysis” established by Brunner and Rechberger (2004) (Matsuno et al. 2006). Applied biomass is composed of organic wastes such as livestock wastes, agricultural residues, food processing residues, wood or fish wastes, garbage and sludge of domestic waste water, which are available abundantly in rural areas. Evaluated parameters are nitrogen, phosphorus, potassium, carbon and raw weights of each material. Basic unit areas are municipalities, and “agricultural fields”, “livestock facilities”, “water bodies”, “human living areas”, “food processing facilities” and

“recycling facilities” (Yuyama 2004). The method has been used for estimation of major sources of nitrogen loads and examination of the effectiveness of measures to reduce nitrogen loads to water bodies in river basins of Japan (Matsuno et al. 2006). Following these studies, this study will use this method extensively to clarify and evaluate the present conditions of biomass use and regional environment in an objective area. However, to adapt this method to developing countries such as Vietnam in which available data is limited, the structure may have to be simplified to be suitable for the site. Thus, this issue will be a main focus in Chapter 3.

2.3 Fertilizer effects of digested slurry on rice plants

Digested slurry contains specific amounts of nitrogen, potassium and phosphorus as mentioned in Chapter 1, making it a potential fertilizer for plants. Digested slurry has almost the same effects as chemical fertilizers under various application conditions. Li et al. (2003) indicated that the effects of cattle digested slurry applied by spreading onto the soil surface at both basal and top-dressing (both were after transplanting) on plant length, leaf area index (LAI), grain yield, or biomass of edible rice were not significantly different from those of chemical fertilizers with approximately equal nitrogen application rates in a field experiment with clay loam. Miho et al. (2004) reported that the plot with digested slurry applied by spreading onto or into the surface water at both basal and topdressing showed almost the same effects on growth and production of edible rice as chemical fertilizers with the same nitrogen application rates in a field experiment. Sunaga et al. (2009) and Win et al. (2009) reported that rice growth and biomass production of high-yielding rice was almost the same in plots with cattle digested slurry applied by spreading onto the soil surface and immediately plowing at basal, and spreading onto surface water at topdressing as plots with chemical fertilizers applied at the same nitrogen application rate in the lysimeter experiments using gray lowland soil. Zenmyo et al. (2009) indicated that rice growth of edible rice with digested slurry applied was almost the same as chemical fertilizer by the same application method of Sunaga et al. (2009) and Win et al. (2009) with pot experiments using gray lowland soil. Koga et al. (2010) showed that application of digested slurry as top-dressing by pouring with irrigation water onto the field increased yield components such as grain number per head of rice plants and grain yield of edible rice in the field experiments, and concluded that digested slurry is effective for growth and yield of rice plants when used as a top-dressing. Watanabe et al. (2011) reported that there was no significant difference in yield, taste, dry weight and nitrogen content of rice plants at the heading stage in plots with digested slurry applied by spreading onto soil surface and plowing immediately or injection into soil at basal and spreading onto soil surface with irrigation water at topdressing as the plot with chemical fertilizer applied at approximately the same nitrogen application rates. Kamioka and Kamewada (2011) indicated that almost the same rice growth and yield of edible rice

was obtained when using cattle digested slurry as basal by spreading onto surface water, and plowing immediately similar to the use of chemical fertilizer of the same nitrogen application rate in field experiments. Mihara et al. (2011) showed almost the same rice growth and yield of edible rice when using digested slurry as basal and topdressing both by spreading in the surface water after transplanting similar to treatment of chemical fertilizer with twice the rate of nitrogen application as chemical fertilizer in the field experiment with gray lowland soil. Phayom et al. (2012) reported that the use of digested slurry as topdressing with periodic application to poor sandy loam soil increased N uptake, agronomic efficiency, which is the increase in grain yield per unit N input (Li et al. 2003), and fertilizer N recovery efficiency when compared with the use of chemical fertilizer as mainly basal. Nishikawa et al. (2012) reported that at the standard nitrogen application rate for edible rice (10 g m^{-2}), almost the same grain yield was obtained in plots with cattle slurry applied as basal or split applications and topdressing as in plots treated with chemical fertilizer for an average of seven years with yearly applications. They also indicated the split application of digested slurry improved N efficiency in rice plants in field experiments with grey lowland soil.

The above previous studies show that the application rate of digested slurry was decided based on ammonia-nitrogen (NH_4-N) (Win et al. 2009; Kamioka and Kamewada 2011; Nishikawa et al. 2012) or based on total nitrogen (T-N) (Miho et al. 2004; Zenmyo et al. 2009; Koga et al. 2010; Mihara et al. 2011; Phayom et al. 2012) in the digested slurry. Appropriate application rate for digested slurry should be decided according to various factors such as field conditions, application method, chemical properties of digested slurry, or inorganic N mineralized from the soil that sometimes accounts for 60-70% of the total N uptake during the growing period (Nishikawa et al. 2012).

There are also reports that digested slurry decreased rice growth and production when compared to chemical fertilizers. Ammonia volatilization was increased by high pH, high NH_4-N concentrations in surface water, high water temperature or high wind speed (Hayashi et al. 2008). Therefore, nitrogen loss by ammonia volatilization should be taken into account in application of digested slurry with high pH and high NH_4-N concentrations to paddy fields. Zenmyo et al. (2009) reported that tiller number, shoot dry weight and the gross recovery rate of nitrogen applied to edible rice decreased with the use of digested slurry by spreading on the soil surface and plowing immediately at basal, and spreading onto surface water at topdressing in a pot experiment with gray lowland soil, and concluded that this may be due to nitrogen loss by ammonia volatilization. Watanabe et al. (2011) also reported that use of digested slurry by pouring with irrigation water as basal decreased yield, dry weight and nitrogen content of rice plants at the heading stage in field experiments. Miho et al. (2004), Sunaga et al. (2009), Win et al. (2009; 2010), Sasada et al. (2011) and Chen et al. (2013) reported higher ammonia volatilization in application of digested slurry

when compared to chemical fertilizer applications such as 13% of applied NH_4-N (Win et al. 2009), 8.9% of applied NH_4-N (Win et al. 2010), 2.5-2.9% of applied NH_4-N (Sasada et al. 2011) and approximately 16.4% of applied N (Chen et al. 2013). Soil in Vietnam has a pH lower than 5 (Pham et al. 2006). Ammonia volatilization for surface water with a pH of 3.4 to 6.2 was low, approximately 1.7% of the N applied during the cropping period when applying urea during the wet season in the Mekong Delta Region in Vietnam (Watanabe et al. 2009). Loss of nitrogen from digested slurry in paddy fields in Vietnam with relatively low pH is not significant, but not negligible.

2.4 Environmental effects of application of digested slurry in paddy fields

Nitrogen in digested slurry enters the soil N pool mainly as NH_4-N. Li et al. (2003) reported that the NH_4-N was directly used by rice or absorbed by soil clay particles, or, alternatively, could be oxidized to NO_3-N and may diffuse or percolate into the soil reduction layer, and then, be lost by denitrification. They also mentioned that organic matter in digested slurry may enter the soil organic pool and contribute to the preservation of soil fertility, therefore, pollution of underground water and streams by nitrogen and organic matter is not a major problem, if water is kept in the paddy field after application of digested slurry. Watanabe et al. (2011) reported that the nitrogen load in effluents for application of digested slurry by three different application methods, i.e. pouring with irrigation water, spreading onto the soil surface and mixing with soil, and injection into soil, were almost the same as application of chemical fertilizer, approximately 10% of nitrogen applied during cultivation. Sasada et al. (2011) indicated that the concentrations of total soluble organic C and total soluble N in the drainage water were not significantly different among the treatments of cattle digested slurry, pig digested slurry and chemical fertilizer, and the concentrations of nitrate were lower than 0.5 mg L^{-1} in all treatments during flooding in the lysimeter experiment with gray lowland soil. Kamioka and Kamewada (2011) indicated no significant difference in infiltration of inorganic nitrogen, which was approximately 2.5% of applied nitrogen, between treatments of cattle digested slurry and chemical fertilizer in the lysimeter experiment with andosol. Sunaga et al. (2009) showed that the T-N leaching in the treatments of cattle digested slurry was approximately 3%, almost the same as chemical fertilizer with the same nitrogen application rate in the lysimeter experiment with gray lowland soil. Chen et al. (2013) indicated that there was no significant difference in nitrogen load by surface discharge and percolation between treatments with digested slurry and chemical fertilizers, differences were small at approximately 0.7% and 2.0% for the N applied. From these previous results, nitrogen loads by surface discharge or percolation may not be crucial. However, the low nitrogen loads are derived from their proper water management after fertilization. For example, Watanabe et al.

(2011) showed that nitrogen concentrations in surface water increased to more than 10 mg L^{-1} after application of digested slurry or chemical fertilizers of 6.0 to 7.0 gN m^{-2} and two weeks were needed to decrease to less than 1 mg L^{-1} in a field experiment. Therefore, they proposed that at least two weeks is needed to prevent surface discharge. Kamioka and Kamewada (2011) indicated that nitrogen levels in surface water at the plots treated with digested slurry and chemical fertilizers of 4.0 gN m^{-2} once increased to more than 15 mg L^{-1} after fertilization, and decreased to 0.3 mg L^{-1} in 10 days after fertilization in lysimeter experiments. Chen et al. (2013) also indicated that for 7 days after application of digested slurry or chemical fertilizer, nitrogen levels were relatively high, and concluded that it is necessary to prevent surface water overflow from the plot for 7 days after fertilization to avoid surface water pollution. These studies suggested that, to avoid pollution due to surface drainage, surface water must be kept on a paddy field for an enough period until its nitrogen concentration is reduced. They also suggested that the length of such a period could be variable according to local soil and climate conditions. This implies the necessity of conducting field experiments in the study area in Vietnam to find a suitable length of such a period.

Microbial pollution of surrounding environments with application of digested slurry should be considered if: 1) feedstock of digested slurry contains livestock or human manure, 2) fermentation is not conducted with thermophilic way, or 3) fermentation is conducted without any sterilization processes. Huong et al. (2014) reported that *E. coli* concentrations in feedstock was reduced only 1 to 2 log units during digestion, and 3.70 ± 0.84 $\log_{10}$ CFU (CFU, colony forming unit) mL^{-1} of *E. coli* (n=146) was contained in digested slurry from household biogas digesters with feedstock of pig slurry and human excreta in Northern Vietnam. Similar reduction capacity was reported in *E. coli* for biogas digesters with feedstock of swine manure in Southern Vietnam (Kobayashi et al. 2007). Huong et al. (2014) estimated that such a limited reduction in *E. coli* suggests that bacterial pathogens like *Salmonella*, which has been found in 5-50% of pigs in Vietnam, and *Campylobacter*, which is an important cause of diarrhea in Vietnamese children, are likely to be present in the effluent from biogas systems with the feedstock of pig manure and human excreta. Contamination of rice plants and hygienic risk for humans who eat rice from the application of digested slurry should be low because rice is eaten after cooking. Prevention of microbial pollution of lower water bodies with application of digested slurry should be considered. Pathogens derived from manure-related material after being applied to paddy fields can be decreased gradually by exposition of UV radiation or increases in the pH of surface water during photosynthesis of rice plants (Ueda et al. 2003). It was indicated that fecal coliforms in surface water in paddies treated with unchlorinated secondary effluents from sewage treatment works decreased at a rate of approximately 0.6 log day^{-1} (Ueda et al. 2003). However, survival of microbes in the environment is influenced by many factors including temperature, soil types, occurrence of other bacteria and soil protozoa (Ohtomo et al. 2004), sunlight, organic matter

content, etc. (Nicholson et al. 2005). Therefore, it is important to examine the microbial fates at sites, where digested slurry is applied, to prevent hygienic water pollution of lower water bodies by discharging of surface water in which sufficient decrease in pathogens is not confirmed.

2.5 Transportation and application methods of digested slurry to paddy fields

The utilization of digested slurry in paddy fields requires transportation of digested slurry from the biogas digesters (Thu et al. 2012) and application to the fields. As a transportation method of digested slurry, vacuum trucks are popular and usually used in Japan (Yamaoka et al. 2012). A model for planning the effective transportation and application of digested slurry to farmlands using vacuum trucks was developed in Japan (Yamaoka et al. 2009; 2011; 2012). In the model, optimal plan for transportation and application of digested slurry can be calculated considering such factors as production rate or chemical components of digested slurry, locations of the biogas plant and agricultural fields, possible application season, application rate per area, application area of fields, numbers of vacuum trucks (Yamaoka et al. 2009). The model has been developed by introducing the use of slurry spreaders (Yamaoka et al. 2011), operation with plural vacuum trucks for digested slurry and installation of intermediate tanks (Yamaoka et al. 2012).

There are three methods for application of digested slurry to paddy fields, i.e. pouring with irrigation water from an inlet using a vacuum truck, spreading on the soil surface with a digested slurry spreader, and injecting into the soil with an injector (Watanabe et al. 2011). The pouring method is applicable after irrigation and during rice growth as additional fertilization (Phayom et al. 2012). The methods for application with a spreader and injector are applicable for basal fertilization before planting (Iida et al. 2009). The spatial distribution of digested slurry focusing on nitrogen applied to a field by the pouring method has been examined by numerical analysis (Yuge et al. 2014; Inomura et al. 2010). The possibility to obtain the same or better yield with the use of digested slurry by the pouring method as by conventional cultivation with chemical fertilizers has been shown through actual field studies (Koga et al. 2010; Mihara et al. 2011). The detailed procedures for the pouring method were compiled by Iwashita et al. (2008) as follows; 1) decreasing the surface water of the field to shallow ponding conditions such as a water level of 0 cm (Koga et al. 2010) or 0.3 cm (Mihara et al. 2011) before application of digested slurry, 2) pouring digested slurry with a specific volume of irrigation water, so that the water depth increased by 4 to 5 cm (Mihara et al. 2011) on the field, 3) digging a trench when there is a shortage of irrigation water and 4) improving the land level by careful paddling. From the above, it was concluded that the pouring method is applicable in Vietnam because of fewer machines so this method was to be decided to test in this study as the first trial.

2.6 Summary

In summary, this chapter has identified the following gaps between the achievements of previous studies and the objectives of this study set in Chapter 1, and the approaches that will be taken in the subsequent chapters in order to close such gaps:

1) "Regional diagnosis" developed in Japan is an effective method to understand the present conditions of biomass use and simulate future biomass use plans at the regional level. However, since simply applying this method as it is needs a lot of detailed data, simplifying the framework of this method would be practical and helpful for applying it to developing countries such as Vietnam in which available data is certainly limited.

2) Effectiveness of digested slurry as fertilizer for rice plant has been studied extensively on Japanese paddy fields under various conditions such as: applications as basal or top-dressing; applications onto soil or surface water with or without plowing immediately or injecting to soil; trials of various nitrogen application rates, like adjusting the rate to be the same as the case of chemical fertilizer by the NH_4-N content or the T-N content of digested slurry. However, situations for paddy fields in Southeast Asia are quite different from the ones in Japan in terms of climate, soil properties, and rice cultivation styles, etc. Warm climate may cause rapid mineralization of applied nitrogen in digested slurry and soil nitrogen. High or low pH of soil may influence the available ratio of applied nitrogen for rice plants through ammonia volatilization. Rice cultivation styles in Vietnam in which nitrogen fertilizer is applied twice or three times as top-dressing may bring different results from Japanese cases in terms of fertilizer effects of digested slurry for rice. However, there are currently few reports investigating this issue. Therefore, it is necessary to investigate the effectiveness of digested slurry as fertilizer considering appropriate application rate and timing for the site in Vietnam.

3) It has been shown that environmental pollution in lower water bodies such as nitrogen loads and fecal contamination through surface discharge after application of digested slurry may be prevented by keeping surface water of paddy fields for a certain period after application of slurry. However, the period of such water retention may be different according to the situation in the paddy field. Some experiments suggested the period be seven days after fertilization, while other experiments ten days. Therefore, it is necessary to investigate the fate of nitrogen and fecal indicator microbes in surface water after application of digested slurry in paddy fields.

4) Several kinds of transportation and application methods of digested slurry to paddy fields have been developed in Japan. Vacuum trucks are popularly used for transportation, and pouring method is supposed to be the most suitable method when focusing on availability of digested slurry not only for basal but also for top-dressing and minimum necessity of equipment for adopting it. For these reasons, pouring method using vacuum trucks seems to be the most

recommendable method in developing countries such as Vietnam in which specific transportation and application method of slurry has not yet existed, and nitrogen fertilizer is conventionally applied twice or three times as top-dressing. However, the conditions of paddy fields in Southeast Asian Countries are substantially different from Japan. For example, pouring method needs strict and flexible water management to achieve even spatial distribution of digested slurry as mentioned in Section of 2.5, but it may be sometimes difficult in paddy fields in Southeast Asia including Vietnam, where water management practices are not so strict nor flexible, which may sometimes cause extremely dry conditions in surface soil or deep flooding of surface water. Moreover, the cost needed for application of slurry by pouring method may be significantly different between the cases in Japan and Vietnam. If the cost becomes extremely higher than that of conventional cultivation methods with chemical fertilizers, the adoption of slurry may be difficult. For these reasons, it is necessary to investigate whether the pouring method is adoptable to paddy fields in Vietnam through field surveys and observations, and the evaluation from the economic aspect.

References

Brunner PH and Rechberger H (2004) Practical Handbook of Material Flow Analysis. Lewis Publishers.

Chen D, Jiang L, Huang H, Toyota K, Dahlgren RA, Lu J (2013) Nitrogen dynamics of anaerobically digested slurry used to fertilize paddy fields. Biol. Fertil. Soils. 49:647-659.

Do TN, Kazama F, Sakamoto Y, Nishida K (2013) Application of material flow analysis in assessing nutrient fluxes in Day-Nhue River basin, Vietnam. Southeast Asian Water Environment 5. IWA Publishing.

Hayashi K, Nishimura S, Yagi K (2008) Ammonia volatilization from a paddy field following applications of urea: rice plants are both an absorber and an emitter for atmospheric ammonia. Sci. Total Environ. 390:485-494.

Huong LQ, Madsen H, Anh LX, Ngoc PT, Dalsgard A (2014) Hygienic aspects of livestock manure management and biogas systems operated by small-scale pig farms in Vietnam. Sci. Total Environ. 470-471:53-57.

Iida M, Ohdoi K, Ryu C, Umeda M (2009) Basal application of methane fermentation digested liquid using a slurry injector. J. Jpn. Soci. Agr. Mach. 71(2):81-87.

Inomura K, Yuge K, Anan M, Shinogi Y (2010) Numerical analysis of anaerobically digested slurry with irrigation water in rice paddy. J. Fac. Agr, Kyushu Univ. 55(2):357-363.

Iwashita K, Fukushi K, Sugita H, Yuge K, Tanaka M and Nakano Y (2008) Establishment of rural resource recycling through the effective application of digested slurry from methane fermentation system to paddy and upland fields. Res. Inst. Resour. Circ., Jpn. Soc. Irrig. Drain. Rural Eng.

4:55-70

Izumi T, Matsubara E, Iizumi Y (2013) Registration of clean development mechanism project in Viet Nam. Water, Land and Environ. Eng. 81(3):207-210.

Kamioka H, Kamewada K (2011) Effect of anaerobically digested cattle slurry as basal application on paddy rice Koshihikari. Jpn. J. Soil Sci. Plant Nutr. 82:31-40.

Kobayashi H, Khai LTL, Phan TT, Yamasaki S, Akiba M, Hata E, Taniguchi T (2007) Prevalence and characteristics of pathogenic Escherichia coli in a swine breeding environment in Can Tho Province. JIRCAS Working Report. 55:35-40.

Koga Y, Matsuo M, Terao H, Ogawa T, Hoyoshi K, Kagehigashi S, Kurogi Y, Nishiwaki A (2010) Effects of anaerobically digested slurry to the growth and yield of rice. Bull. Fac. Agric., Univ. Miyazaki. 56:15-27

Li KZ, Inamura T, Umeda M (2003) Growth and nitrogen uptake of paddy rice as influenced by fermented manure liquid and squeezed manure liquid. Soil Sci. Plant Nutr. 49(3):463-467.

Li YY (2005) Toward the holistic use of biomass resources (3)-methane fermentation technology-. Jour. JSIDRE 73(8):739-744.

Matsubara E, Izumi T, Nguyen HC, Nguyen HT (2014) Emission reduction and financial feasibility evaluation of a household biogas CDM project in Viet Nam. IDRE Journal. 294:55-64.

Matsumoto N (2000) Development of estimation method and evaluation of nitrogen flow in regional areas. Bull. Nat. Inst. Agro-Environ. Sci. 18:81-152.

Matsuno Y, Hatcho N, Ieshima A, Shinogi Y (2006) Material cycle in peri-urban area: estimation of nitrogen flow in the Yamato River Basin in Nara City. Environ. Sci. 19(6):495-506.

Mihara M, Hyakutake C, Ijichi T, Mori N (2011) Fertilizer use of digestive fluids from biogas-plant in rice cultivation. Rep. Kyushu Br. Crop Sci. Japan. 77:15-18.

Miho Y, Tojo S, Watanabe K (2004) Utilization in cultivation and its environmental load of digested slurry from biogas plant. J. Jpn. Soci. Agri. Mach. 66(3):77-83.

Nguyen QC (2005) Dairy cattle development: environmental consequence and pollution control option in Hanoi province, North Vietnam. Research Report No. 2005-RR2006. Published by the Economy and Environment Program for Southeast Asia (EEPSEA), Singapore

Nguyen VCN, Phan TH, Vo HN (2012) Review on the most popular anaerobic digester models in the Mekong Delta. J. Viet. Env. 2(1):8-19.

Nicholson FA, Groves SJ, Chambers BJ (2005) Pathogen survival during livestock manure storage and following land application. Bioresour. Technol. 96:135-143.

Nishikawa T, Li K, Inoue H, Umeda M, Hirooka H, Inamura T (2012) Effects of the long-term application of anaerobically-digested cattle manure on growth, yield and nitrogen uptake of paddy rice (Oryza sativa L.), and soil fertility in warmer region of Japan. Plant Prod. Sci. 15(4):284-292.

Noike T (2009) Methane fermentation. Gihodo Shuppan, Tokyo. Japan

Ohtomo R, Minato K, Saito M (2004) Survival of Escherichia coli in a field amended with cow feces slurry. Soil Sci. Plant Nutr. 50(4)575-581.

Oritate F, Yuyama Y, Nakamura M, Yamaoka M, Nguyen PD, Dang VBH, Mochidzuki K, Sakoda A (2015) Regional diagnosis of biomass use in suburban village in Southern Vietnam. J. Jpn. Inst. Energy, 94:805-829.

Pham QH, Mike M, Ingrid O (2006) Nutrient recycling for sustainable agriculture in Viet Nam. In Food and Agriculture Organization of the United Nations, regional office for Asia and the Pacific (ed) Improving plant nutrient management better farmer livelihoods, food security and environmental sustainability, Proceedings of a Regional Workshop. FAO, Bangkok, Thailand.

Phayom W, Iwashita K, Iwata M, Tanaka M (2012) Study of a slurry irrigation system by methane fermentation digestion for wet rice cultivation. EAEF 5(2):57-64.

Sasada Y, Win KT, Nonaka R, Win AT, Toyota K, Motobayashi T, Hosomi M, Dingjiang C, Lu J (2011) Methane and N2O emissions, nitrate concentrations of drainage water, and zinc and copper uptake by rice fertilized with anaerobically digested cattle or pig slurry. Biol Fertil. Soils. 47:949-956.

Sunaga K, Yoshimura N, Hou H, Win KT, Tanaka H, Yoshikawa M, Watanabe H, Motobayashi T, Kato M, Nishimura T, Toyota K, Hosomi M (2009) Impacts of heavy application of anaerobically digested slurry to whole crop rice cultivation in paddy environment on water, air and soil qualities. Jpn. J. Soil Sci. Plant Nutr. 80:596-605.

Thu CTT, Cuong PH, Hang LT, Chao NV, Anh LX, Trach NX, Sommer SG (2012) Manure management practices on biogas and non-biogas pig farmers in developing countries-using livestock farms in Vietnam as an example. J. Cleaner Prod. 27:64-71.

Ueda T, Ishida K, Hata K, Matsumori K (2003) Fate of indicator microorganisms in wastewater reuse for paddy field irrigation. Proceedings of the IWA Asia-Pacific Regional Conference, 489, Bangkok, Thailand, October 2003.

Watanabe S, Nakamura K, Ryu CS, Iida M, Kawashima S (2011) Effects of different application methods of methane fermentation digested liquid into the paddy plot on soil nitrogen behavior and rice yield. IDRE Journal. 79(4):265-274.

Watanabe T, Son TT, Hung NN, Truong NV, Giau TQ, Hayashi K, Ito O (2009) Measurement of ammonia volatilization from flooded paddy fields in Vietnam. Soil. Sci. Plant Nutr. 55:793-799.

Win KT, Toyota K, Motobayashi T, Hosomi M (2009) Suppression of ammonia volatilization from a paddy soil fertilized with anaerobically digested cattle slurry by wood vinegar application and floodwater management. Soil. Sci. Plant Nutr. 55: 190-202.

Win KT, Toyota K, Nonaka R, Toyota K, Motobayashi T, Hosomi M (2010) Effects of option mitigating ammonia volatilization on CH4 and N2O emissions from a paddy field fertilized with anaerobically digested cattle slurry. Biol. Fertil. Soils. 46: 589-595.

Yamada R (2008) Diagnosis, design and evaluation of diversified farming in the Mekong Delta of Vietnam: Based on the farming systems research approach. Association of Agriculture and Forestry Statistics. Tokyo. Japan

Yamaoka M, Yuyama Y, Nakamura M, Shimizu N, Oritate F (2009) A planning model for transportation and land application of digested liquid to farmland and an example calculation with the model. Res. Inst. Resour. Circ., Jpn. Soc. Irrig. Drain. Rural Eng. 5:41-55.

Yamaoka M, Yuyama Y, Nakamura M, Aihara H, Shimizu N, Yuyama Y (2011) Development of a model for planning transportation and application of digested slurry to farmlands. IDRE Journal 79(3):89-96.

Yamaoka M, Yuyama Y, Nakamura M, Oritate F (2012) Enhancement of a model for planning transportation and application of digested slurry to farmlands -utilization of plural vacuum trucks and intermediate tanks-. IDRE Journal 80(4):53-61.

Yuge K, Maeda H, Tanaka M, Anan M, Shinogi Y (2014) Spatial-uniform application method of methane fermentation digested slurry with irrigation water in the rice paddy field. Paddy Water Environ. 12:335-342.

Yuyama Y (2004) Developing strategy on Diagnosis Model for Biomass Resources Circulative Use. Jour. JSIDRE 72(12):1037-1040.

Yuyama Y (2005) Toward the holistic use of biomass resources (1)-Region-based diagnosis for the holistic use of biomass resources-. Jour. JSIDRE 73(6):501-506.

Yuyama Y, Nakamura M, Yamaoka M (2007) Technologies to use the digested liquid produced by methane fermentation. Trans. of JSIDRE. 247:119-129.

Zenmyo T, Yamakawa T, Kikuchi M (2009) Effect on rice growth of the different application of liquid phase of digested organic waste. Sci. Bull. Fac. Agr., Kyushu Univ. 64(1):1-5.

CHAPTER 3

Analysis of present conditions of biomass use in a suburban village in Southern Vietnam

3.1 Introduction

This chapter describes the present conditions of regional biomass use in preparation for proposing improved biomass scenario later in Chapter 6 in a suburban village in Southern Vietnam. The village is one of common villages in Southeast Asia due to existence of livestock farming and rice cultivation. Data related to livestock farming, rice cultivation and so on is collected by interviews, field surveys and literature reviews, and applied to the regional diagnosis.

3.2 Methods

3.2.1 Objective village

Objective village for this study was Thai My Village in Cu Chi District, Ho Chi Minh City, located about 43 km north-west from the center of Ho Chi Minh City as shown in Figure 3-1. In this village, rice cultivation and livestock industries are popular. Annual rainfall is approximately 1,880 mm, and there are two seasons, a dry season and a rainy season. Household-scale methane fermentation systems using livestock excreta, called "biogas digesters" are popular in this village through promotion by government-led programs (Vietnam Livestock Production Department MARD and Netherlands Development Organization SNV 2013). There are 111 households that have biogas digesters with capacities of 7.8±1.2 m^3 in the fermentation tank volume. Information and data collected by the surveys are shown in Table 3-1.

3.2.2 Method of the regional diagnosis

The regional diagnosis method, developed by Yuyama (2005), is designed to draw a region-wide map of material flows on the basis of survey data, and conducted by the following procedures.

First, data needed for analysis of the present conditions of biomass use for the

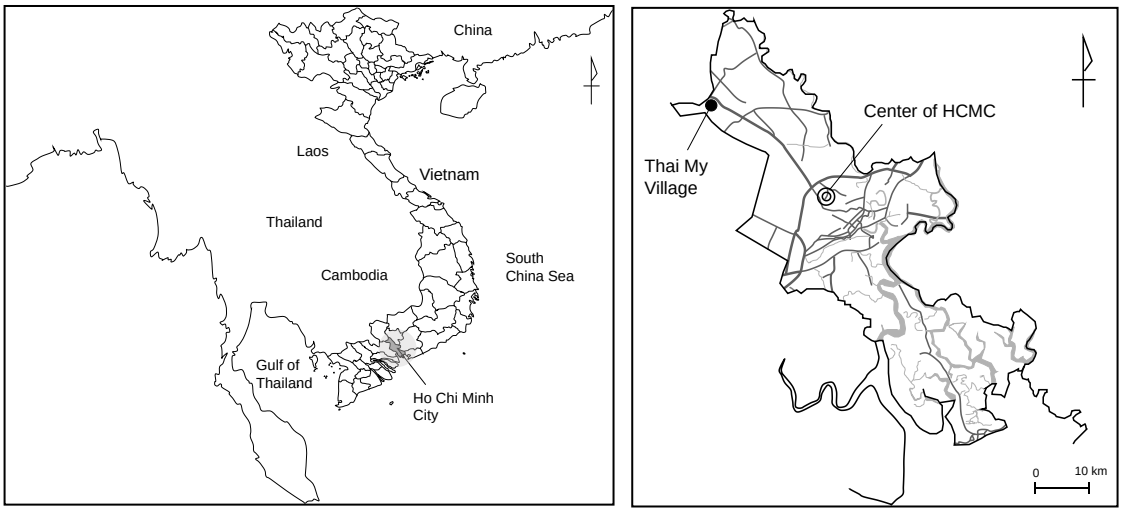

Figure 3-1 Location of Ho Chi Minh City and Thai My Village

Table 3-1 Data collected for regional diagnosis (Page 1 of 4)

Item	Data〔(Data source)〕
a. Basic information	
(a) Land use and the area	
Total area of the village	2,415 ha〔(1)〕
Agricultural land	1,861 ha〔(1)〕
Road	113 ha〔(1)〕
River and Canal area	123 ha〔(1)〕
Residential area	159 ha〔(1)〕
Others	159 ha〔(1)〕
(b) Population	
Population	10,849 people〔(1)〕
Number of households	2,873 households〔(1)〕
Number of farmer households	967 households〔(1)〕
Agricultural workers	2,224 people〔(1)〕
(c) Variety and usage of energy at home	
Fuel variety	Electricity, Wood, Biogas, Rice straw and husk〔(1)〕
Usage of fuel	Electrical equipment, Lighting, TV, Radio, Stove burner, Cooking〔(1)〕
(d) Conditions of sources for drinking water	
Water well in house (Depth; 4-50 m), Tank for drinking water〔(1)〕	
(e) Environmental problems	
Discharge of large quantity of untreated pig excreta〔(1)〕	
b. Agricultural information	
(a) Main crop situation, annual planted area	
Rice	544 ha, 2 or 3 crops in a year according to the economic situation or field conditions〔(2)〕
Corn and peanuts	200 ha〔(2)〕

Table 3-1 Data collected for regional diagnosis (Page 2 of 4)

Item	Data〔(Data source)〕
Vegetables	75 ha〔(2)〕
Fruits	146 ha〔(2)〕
(b) Agricultural machinery	
Machinery types and numbers in the village	Combine; 2 equipment Tractor; 7-8 equipment Rice mill; 4 equipment Tilling machinery Water pump〔(2)〕
Fuel types for machinery	Diesel oil (for large machinery) Gasoline (for small machinery) 〔(2)〕
c. Information about rice cultivation	
(a) Variety and application rate of fertilizer	Mixed fertilizer of NPK Urea, Phosphorus Potassium, etc. 500-900 kg ha^{-1} $(crop\ season)^{-1}$ (total weight of fertilizers) 〔(3)〕
(b) Method for water management	By portable pump owned by farmer through canals nearby the field〔(4)〕
(c) Water quality of canal and river	Shown in Table 3-2〔(5)〕
(d) Amount of irrigation water	10,286.28 t ha^{-1} y^{-1}〔(App. 1-1 No. 7)〕
(e) Annual precipitation	18,818 t ha^{-1} y^{-1}〔(App. 1-1 No. 4)〕
(f) Ammonia volatilization	0.0017 t ha^{-1} $(crop\ season)^{-1}$〔(App. 1-1 No. 21)〕
(g) Denitrification	0.03 t ha^{-1} $(crop\ season)^{-1}$〔(App. 1-1 No. 19)〕
(h) Nitrogen fixation	0.0178 t ha^{-1} $(crop\ season)^{-1}$〔(App. 1-1 No. 13)〕
(i) Carbon dioxide emissions	14.2 t ha^{-1} y^{-1} (2,952 t y^{-1})〔(App. 1-1 No. 24-27)〕
(j) Percolation	202 mm $(crop\ season)^{-1}$〔(App. 1-1 No. 22)〕
(k) Methane gas emissions	160 kg ha^{-1} y^{-1}〔(App. 1-1 No. 24)〕
(l) Yield and by-products	
Yield	Winter-spring crop; 5.0-6.0 t ha^{-1} $(crop\ season)^{-1}$〔(1), (6)〕
	Spring-summer crop; 3.0-4.0 t ha^{-1} $(crop\ season)^{-1}$〔(1), (6)〕
	Sumer-autumn crop; 3.0 t ha^{-1} $(crop\ season)^{-1}$〔(1)〕
Average yield	4.0 t ha^{-1} $(crop\ season)^{-1}$ (2,176 t y^{-1}) 〔(1), (6)〕
*Yield indicates 15% moisture for unhulled rice. *Rice is harvested 10-20 cm above the ground, so rice straw is divided into upper part and lower part.	
Rice husk	0.798 t ha^{-1} $(crop\ season)^{-1}$ (434 t y^{-1}); Used for making compost〔(1), (6)〕
Rice bran	0.351 t ha^{-1} $(crop\ season)^{-1}$ (191 t y^{-1}); Used for livestock feed 〔(1), (6)〕
Rice straw (Upper part)	2.97 t ha^{-1} $(crop\ season)^{-1}$ (1,618 t y^{-1}); Not used, burned in the field 0.74 t ha^{-1} $(crop\ season)^{-1}$ (405 t y^{-1}); Shipment to outside 0.74 t ha^{-1} $(crop\ season)^{-1}$ (405 t y^{-1}); Used for livestock feed (In total; 2,428 t y^{-1})〔(1), (6)〕

Table 3-1 Data collected for regional diagnosis (Page 3 of 4)

Item	Data〔(Data source)〕
Rice straw (Lower part)	1.07 t ha^{-1} (crop season)$^{-1}$ (582 t y^{-1}); Remained, burned in the field〔(1), (6)〕
d. Information about cultivation except for rice	
(a) Variety and application rate of fertilizer	
Chemical fertilizer	Corn; 3,500 kg ha^{-1} y^{-1} Vegetables; 2,560 kg ha^{-1} y^{-1} Fruits; 4,000 kg ha^{-1} y^{-1}〔App. 1-2 No. 3, 9, 12〕
Compost	25 t ha^{-1} y^{-1}〔App. 1-2 No. 5〕
(b) Nitrogen fixation	0.11 t ha^{-1} y^{-1}〔App. 1-2 No. 29〕
(c) Carbon dioxide emissions	9.2 t ha^{-1} y^{-1} (3,859 t y^{-1})〔App. 1-2 No. 32, 33〕
(d) Nitrogen loss by emission	0.018 t ha^{-1} y^{-1}〔App. 1-2 No. 31〕
(e) Percolation	5,648 t ha^{-1} y^{-1} (2,377,969 t y^{-1}) 〔App. 1-1 No.4, App. 1-2 No. 1, 34, 35〕
(f) Yield	Corn; 7.5 t ha^{-1} y^{-1}, Vegetables; 62.95 t ha^{-1} y^{-1} Fruits; 0.824 t ha^{-1} y^{-1}〔App. 1-2 No. 14, 17, 20〕
e. Information about livestock	
(a) Kinds and numbers	
Beef cow	1,659 heads〔(7)〕
Milk cow	61 heads〔(7)〕
Buffalo	400 heads〔(7)〕
Pig	11,000 heads〔(7)〕
Poultry	8,000 heads〔(7)〕
(b) Method of livestock raising, variety of feed	
Beef cow and buffalo	Raised outside during daytime and in cattle shed at night〔(8)〕
Milk cow and pig	Raised in cattle shed〔(8)〕
Feed	Bran, grass, etc. 〔(8)〕
(c) Generation rate of livestock excreta and its contents	
Pig	Feces; 0.73 t $head^{-1}$ y^{-1} (C; 18.68%, N; 0.83%) Urine; 0.49 t $head^{-1}$ y^{-1} (C; 0%, N; 32.5%)〔App. 1-3 No. 2-6〕
Beef	Feces; 8.22 t $head^{-1}$ y^{-1} (C; 15.75%, N; 0.7%) Urine; 4.56 t $head^{-1}$ y^{-1} (C; 0%, N; 27.1%)〔App. 1-3 No. 8-12〕
Milk cow	Feces; 8.22 t $head^{-1}$ y^{-1} (C; 8.55%, N; 0.38%) Urine; 4.56 t $head^{-1}$ y^{-1} (C; 0%, N; 27.1%)〔App. 1-3 No. 14-18〕
Buffalo	Feces; 8.22 t $head^{-1}$ y^{-1} (C; 6.98%, N; 0.31%) Urine; 4.56 t $head^{-1}$ y^{-1} (C; 0%, N; 27.1%)〔App. 1-3 No. 24-28〕
(d) Flow of livestock excreta	
Pig excreta	Approximately 10%; Used as feedstock for biogas digester 10 t $week^{-1}$ of feces; Shipped outside the village as feedstock for compost Rest discharged to lower water bodies〔(8)〕

Table 3-1 Data collected for regional diagnosis (Page 4 of 4)

Item	Data〔(Data source)〕
Milk cow excreta	Approximately 10%; Used as feedstock for biogas digester Rest discharged to lower water bodies〔(8)〕
Beef excreta	Half of feces; Sold outside the village Another half of feces; Used as feedstock for composting at composting facility Rest discharged to the lower water bodies〔(8)〕
Buffalo	Similar to beef cow excreta〔(8)〕
(e) Information about biogas digester	
Number in the village	111 digesters〔(8)〕
Capacity	7.8±1.2 m^3〔(8)〕
Feedstock	Pig excreta and milk cow excreta〔(8)〕
Biogas generation rate	746.7 (Nm^3 (t-Carbon of feedstock biomass) $^{-1}$) 〔(8), (9)〕
Usage of biogas	Mainly cooking in farmer households〔(8)〕
Use or disposal of digested slurry	Partially used for trees in the backyard, adjacent crop field of farmer's house or fish pond, and mostly discharged to canals and rivers with or without passing through the soil〔(8)〕

(Abbreviations)
HCMUT: Ho Chi Minh City University of Technology
DOST-HCM: Department of Science and Technology
DARD-HCM: Department of Agriculture and Rural Development
VPC: Thai My Village People Committee
Cu Chi PC: People Committee of Cu Chi
App.; Appendix
(1) Interviews of VPC, DOST, Cu Chi PC and Villagers
(2) Interviews of VPC, DOST, Cu Chi PC, Villagers and DARD
(3) Interviews of VPC, Villagers
(4) Interviews of VPC, Villagers and DOST
(5) Sampling surveys conducted in Thai My Village
(6) Field surveys at test field in Thai My Village
(7) Interviews of VPC and DARD
(8) Interviews of Villagers
(9) Calculations based on data from Interviews of Villagers

objective area were collected as described in the following section. Some data had to be substituted with Japanese ones though on-site or Vietnamese original data should be used for the regional diagnosis. Most data related to non-paddy fields were substituted with Japanese ones. However, the regional diagnosis in this study focused on material flow around paddy field compartments. Therefore, most conclusions in this study reflect the Vietnamese on-site situation.

Second, the present conditions of biomass use were represented as the “present” material flow diagram. It is composed of a “compartment (box)” that represents space to generate, convert or use biomass, and “arrow” that represents material flow. The compartments involve livestock farming, agricultural fields, biogas digesters, and composting facilities, etc. Components for analysis were raw weight, water content, carbon content and nitrogen content of feedstock biomass and products. Each value used in the material flow diagram was calculated by multiplying the

specific unit of each parameter by its abundance. Specific unit was based on the surveys or literature and the data sources and detailed calculations are shown in the Appendix 1 of this thesis.

Third, the regional diagnosis method evaluates the effects of newly installing biomass conversion facilities, such as biogas digesters, by recalculating the material flows after adjusting some input data according to future scenarios. This step will be a focus in Chapter 6.

3.2.3 Data collection for regional diagnosis

Data for regional diagnosis was collected by interviews, field surveys and literature reviews.

Interviews were conducted from 11 to 29 January 2010 and 27 October 2010. Interviewees were farmers (30 households) and public administrations such as Vietnam Department of Science and Technology, Peoples Committee of Ho Chi Minh City (DOST-HCM), Department of Agriculture and Rural Development of Ho Chi Minh City (DARD-HCM), People committee of Cu Chi District, People committee of Thai My Village, the objective village in this study.

Field surveys of water quality in the canal, river and household wells (depth of borehole; 30-60 m) were conducted seven times in the objective village from 2010 to 2012 (21 April 2010, 30 June 2010, 26 October 2010, 14 January 2011, 19 April 2011, 12 July 2011 and 7 April 2012). Ten sampling points (SW1 – SW10) and three sampling points (GW1 – GW3) were selected for surface water and groundwater, respectively, as shown in Figure 3-2. Field surveys at the rice cultivation test field in the objective village were conducted from 6 December 2011 to 24 March 2012, and from 11 May to 17 August 2012 to obtain data on conventional cultivation with chemical fertilizers. In these tests, rice cultivation was conducted with farmers contracted by the study team in 1 hectare of a paddy field. Data and information such as application rate of fertilizers and agrochemicals, the volume of irrigation and drainage water, yield and the amount of by-products such as rice straw, rice husk and rice bran were obtained from records of the working diary and direct measurements at the site. The volume of irrigation and drainage water was calculated by multiplying the capacity of the portable water pump used for irrigation and drainage beforehand, and recorded operating time of it. The yield was measured by weighing unhulled rice bags at harvest on 24 March 2012 and 17 August 2012 at the site, and calculated to a 15% moisture weight using moisture values obtained from weight before and after drying at 105°C for 24 hours. The ratio of rice straw to unhulled rice was calculated by weighing each part sampled at sampling points before harvesting by combine. The ratio of rice husk and rice bran to unhulled rice was calculated by measuring each weight and moisture after rice hulling.

In the same test field, rice cultivation tests using slurry from biogas digesters as a substitute for chemical fertilizers was conducted to compare to the cultivation with chemical fertilizers by setting 8 m^2 experimental plots (Oritate et al. 2013a; Oritate et al. 2013b) from 11 December 2012 to 13 March 2013, and 200 m^2 experimental plots from 14 December 2013 to 26

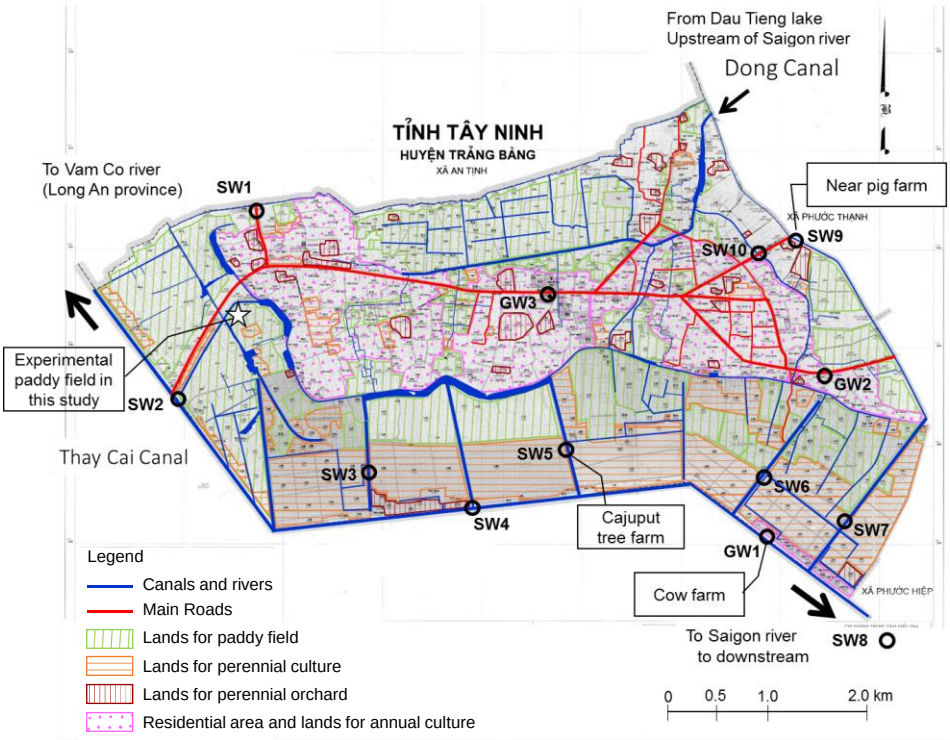

*About signs in above map, "SW" indicates sampling points of surface water, and "GW" indicates sampling points of ground water (depth; 30-60m)

Figure 3-2 Sampling points of surface water and ground water in Thai My Village

March 2014 (Oritate et al. 2014; Oritate et al. 2015). In these experiments, data on application rate of fertilizer and agrochemicals, and yield and yield components were collected by measurements at the site. Details are shown in Appendix 1.

3.3 Results and discussion

3.3.1 Estimation of present conditions of biomass use

Figure 3-3 shows the results of diagnosing the present conditions on biomass use in Thai My Village. The ratio of slurry from biogas digesters to ponds as feed for fishes and to trees in the backyard of farmers' houses was very low in the village, so these descriptions were omitted from the material flow diagram. The obtained results are summarized in the following points:

1) Out of the total livestock excreta of 40,861 t y^{-1}, 13,683 t y^{-1} was taken outside the village as feedstock for compost, 8,458 t y^{-1} used in the village as feedstock for compost, 2,102 t y^{-1} used as feedstock for biogas digesters and 16,618 t y^{-1}, that is, approximately 41% of the total discharged to the lower waterbodies without any treatment.

2) Nitrogen effluent load to water bodies came from untreated livestock excreta, untreated slurry from biogas digesters and discharges from agricultural fields, reaching a total of 131.6 t y^{-1}. The load from untreated livestock excreta accounted for approximately 43% of the nitrogen that cause water pollution. To decrease water pollution and promote resource circulation, use of this untreated livestock excreta as feedstock for compost or feedstock biogas digesters can be proposed.

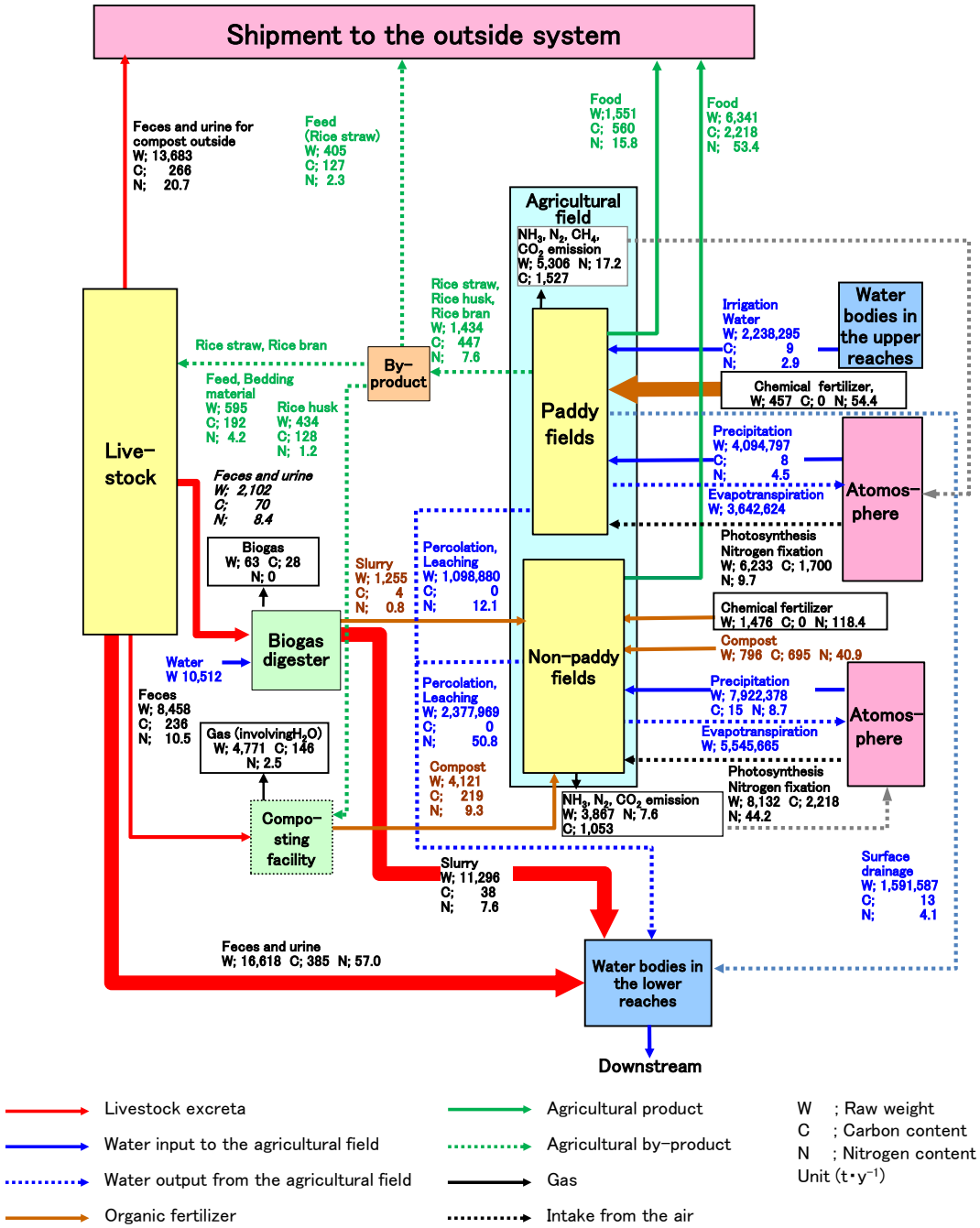

Figure 3-3 Present conditions of Thai My village

3) Numbers of biogas digesters introduced were 111 units, accounting for 5% coverage, for approximately 2,102 t y^{-1} in generated livestock excreta. In many cases, more than 5 times the volume of washing water of livestock excreta from cattle sheds is poured into biogas digesters, usage of digested slurry as liquid fertilizer is limited due to the lack of knowledge or fear of costs for transportation and application of highly-diluted digested slurry to fields.

4) Water quality parameters such as COD, BOD_5, NO_3-N, NH_4-N in the surface water and ground water at some sampling points, especially, near the livestock farms in the village exceeded the standard value in Vietnam (QCVN 08: 2008/BTNMT; QCVN 09: 2008/BTNMT) as shown in Table 3-2 and Table 3-3.

5) Amounts of rice straw, rice husk and rice bran produced in the field was approximately 3,010 t y^{-1}, 434 t y^{-1} and 191 t y^{-1}, respectively. Rice straw of 3,010 t y^{-1} consists of 2,428 t y^{-1} from the upper part and 582 t y^{-1} from the lower part. The upper part was harvested above 10-20 cm from the ground, and lower part remained in the field. In Figure 3-3, rice husk, rice bran and rice straw are shown as flow from “Paddy fields” to “By product”. Within “By-product”, 405 t y^{-1} was transported outside the village, 595 t y^{-1} used as feed for livestock and 434 t y^{-1} used as feedstock for compost inside the village. Whereas, 1,618 t y^{-1} of the upper part of rice straw, which is larger than the “By product” was not used effectively and burned in the fields along with

Table 3-2 Surface water quality of rivers and canals in Thai My Village

	COD	BOD_5	NH_4-N	NO_3-N	TN
	mg L^{-1}	mg L^{-1}	mg L^{-1}	mg L^{-1}	mg L^{-1}
SW1[a]	89	19.7	1.5	20.1	9.0
SW2	72	18.6	1.1	1.5	6.5
SW3	138	19.1	1.6	0.9	3.0
SW4	98	28.9	3.4	1.2	7.8
SW5	84	21.1	1.2	0.4	3.2
SW6	75	20.0	3.8	1.5	9.0
SW7	125	17.1	1.5	3.3	5.6
SW8	84	27.9	3.1	4.3	8.6
SW9	254	74.0	7.4	2.3	18.5
SW10	14	5.4	0.2	0.2	0.7
QCVN08[b]	≤30	≤15.0	≤0.5	≤10.0	-

[a] SW1-SW10 are the sampling points as shown in Figure 3-2. Each value is the average of all data obtained by sampling surveys except for the following missing values: all parameters of SW10 on 26 October 2010, SW6 on 14 January 2011 and SW10 on 7 April 2012 for without water at sampling points, and TN of all sampling points on 21 April 2010 for missing of analysis.
[b] "QCVN08 " is standard for surface water in Vietnam, "QCVN08: 2008/BTNMT"

Table 3-3 Ground water quality in Thai My Village

	pH	TOC	NH_4-N	NO_3-N	TN
		mg L^{-1}	mg L^{-1}	mg L^{-1}	mg L^{-1}
GW1[a]	6.4	2.2	3.1	2.7	7.1
GW2	5.8	4.9	0.2	0.3	0.5
GW3	5.4	0.9	0.1	0.5	0.8
QCVN09[b]	5.5-8.5	-	≤0.1	-	-

[a] GW1-GW3 are the sampling points as shown in Figure 3-2. Each value is the average of all data obtained by sampling surveys except for the following missing values: NO_3-N and TN in all sampling points on 21 April 2010 for missing of analysis
[b] "QCVN09 " is standard for ground water in Vietnam, "QCVN09: 2008/BTNMT"

582 t y^{-1} of the lower part of rice straw within a few weeks after harvesting. Promotion of effective use of this unused rice straw is desired in terms of resource circulation in the region.

3.3.2 Options for decrease of environmental loads by biomass use focusing on energy production

In the previous section, the necessity to promote effective use of untreated livestock excreta that is discharged into water bodies at present was proposed in terms of decrease of environmental loads and regional resource circulation. Moreover, the desirability of effective use of rice straw that is unused at present is also proposed in terms of promoting resource circulation. Among some options for use of these biomass, the use as the feedstock for regional energy production such as biogas or bio-ethanol would be sensible options. Technology for bio-ethanol production from rice straw is now under development as mentioned in Chapter 1, but biogas technology has already been adopted in rural areas in Vietnam as mentioned in Chapter 2 and this chapter. Therefore, use of livestock manure as feedstock for biogas digesters is discussed hereafter. Especially, biogas digesters followed by the use of digested slurry as a fertilizer in paddy fields which occupy large area of agricultural land in the region is proposed as an effective option in terms of 1) decreasing environmental loads, 2) increasing regional energy production, and 3) saving the input of chemical fertilizers to agricultural fields. Organic components in livestock excreta are decomposed through methane fermentation processes in biogas digesters (Li 2005), therefore, digested slurry is easier for plants to use when compared to untreated livestock excreta. However, since actual use of digested slurry in paddy fields is now rarely conducted at the site as mentioned above, it is necessary to investigate effects of it on rice as a fertilizer, environmental effects such as nitrogen pollution or fecal contamination of lower water bodies through surface discharge, and transportation and application method which is economically feasible.

3.4 Conclusion

This chapter investigated the present conditions of biomass use focusing on livestock excreta treatment, rice cultivation and conditions of water quality in waterbodies. Necessary data and information were collected from literature reviews, interviews of farmers and public administrative staff, and field surveys. The material flow diagram that represents the present biomass use showed that untreated livestock excreta may cause water pollution, and some by-products from rice cultivation are not effectively used despite they are sources of energy. The effective use of these through appropriate conversion process can contribute to an increase in production of regional energy such as biogas or bio-ethanol. Especially, the use of currently untreated livestock excreta as a feedstock for biogas digesters followed by the use of digested slurry in paddy fields as a fertilizer is an effective option in terms of environmental conservation and saving the input of chemical fertilizers to agricultural fields.

In promotion of the use of digested slurry, it is necessary to investigate effects of it on rice as a fertilizer, environmental effects, and transportation and application method which is economically feasible.

References

Li YY (2005) Toward the holistic use of biomass resources (3)-methane fermentation technology-. Jour. JSIDRE 73(8):739-744.

Oritate F, Nakamura M, Yamaoka M, Yuyama Y, Nguyen PD, Dang VBH, Nguyen DK, Sakoda S (2013a) Fertilization effect and nitrogen load in use of methane fermentation digested slurry as fertilizer at paddy field in Vietnam. J. Environ. Conserv. Eng. 42(12):23-27.

Oritate F, Nakamura M, Yamaoka M, Yuyama Y, Nguyen PD, Dang VBH, Nguyen DK, Sakoda S (2013b) Trial use of methane fermentation digested slurry at paddy field in Southern Vietnam-evaluation from fecal contamination, nitrogen load and fertilization effect-. J. Sci. Technol., Vietnam 51(5C):649-655.

Oritate F, Nakamura M, Kitagawa I, Nguyen PD, Dang VBH, Nguyen DK, Yuyama Y, Yamaoka M, Sakoda S, Condition for use of digested slurry in paddy fields in Southern Vietnam-Effects on rice growth, rice yield, surface water quality and soil in the field by different application timing and application rates-, Prep. Annual Meeting, Japanese Society of Soil Science and Plant Nutrition, P8-1-20, Sep. 9-11, 2014, Tokyo, Japan

Oritate F, Yuyama Y, Nakamura M, Yamaoka M, Evaluation of energy, cost and environment effect in use of digested slurry at paddy field in Southern Vietnam, Prep. 10th Conference on

Biomass Science, O-34, Jan. 14-15, 2015, Tsukuba

QCVN08: 2008/BTNMT, https://www.env.go.jp/air/tech/ine/asia/vietnam/files/law/V33.pdf. Accessed 10 November 2014

QCVN09: 2008/BTNMT, https://www.env.go.jp/air/tech/ine/asia/vietnam/files/pollution/pollution.pdf. Accessed 10 November 2014

Vietnam Livestock Production Department MARD and Netherlands Development Organization

SNV (2013) Biogas program for the animal husbandry sector in Vietnam. http://www.biogas.org.vn/ english/Home.aspx. Accessed 20 August 2013

Yuyama Y (2005) Toward the holistic use of biomass resources (1)-Region-based diagnosis for the holistic use of biomass resources-. Jour. JSIDRE 73(6):501-506.

CHAPTER 4

Feasibility of use of digested slurry in paddy fields from fertilizer effect and environmental impact

4.1 Introduction

Digested slurry has a potential to be effective fertilizer and also baneful pollutants, because it contains a lot of organic substances, nitrogen and pathogenic microbes. However, effects as a fertilizer and environment impacts of digested slurry have not been quantitatively evaluated in paddy fields in Vietnam. In this chapter, fertilizer effects, fate of nitrogen and fecal indicator microbes with application of slurry are investigated by the field experiment. For evaluation of fertilizer effects, two types of nitrogen application rate focusing on T-N and NH_4-N in digested slurry was prepared to propose the appropriate application rate of digested slurry at the site. For evaluation of environmental effects, prevention of pollution of lower water bodies derived from surface discharge was focused on. Fate of nitrogen components and fecal indicator microbes in surface water of a paddy field after fertilization was investigated to propose the appropriate period for keeping surface water in the paddy fields.

4.2 Materials and methods

4.2.1 Experimental fields and fertilizers

An experiment was conducted during the dry season from December 2012 to March 2013 in a paddy field of Binh Ha Dong, Thai My Village, Cu Chi District (10º59’1978”N 106º22’0857”E). Areas around the experimental field in the western part of Thai My Village are low-lying land, and rice cultivation is conducted twice a year in most paddy fields. The soil is Typic Sulfaquepts (USDA 2010). Main properties of the soil in the experimental fields were: pH of 3.82, EC of 0.017 S m^{-1}, T-N of 3.4 g kg^{-1}, total carbon (T-C) of 43.1 g kg^{-1}, NH_4-N of 4.45 mg $100g^{-1}$, nitrate-nitrogen (NO_3-N) of 0.02 mg $100g^{-1}$, calcium oxide (CaO), magnesium oxide (MgO) and potassium oxide (K_2O) of 52.9, 41.1 and 17.1 mg $100g^{-1}$, respectively.

Experimental plots for three treatments with two replicates of each 8 m^3 were set in the experimental fields as shown in Figure 4-1. ; 1) chemical fertilized plots (hereafter, CF), 2) digested slurry plots with the same nitrogen application rate as CF for NH_4-N in digested slurry (hereafter, MF(NH_4-N)), and 3) digested slurry plots with the same nitrogen application rate as CF for total kjeldahl nitrogen (TKN) in digested slurry (hereafter, MF(T-N)). Granulated mixed fertilizer of NPK (N: P_2O_5: K_2O= 20: 20: 15), powdered urea and phosphorus fertilizer were applied to plot of CF. Digested slurry was collected from household scale biogas digesters of pig farmers shown in Figure 4-2 in Thai My Village. The feedstock was pig manure and wash water from pig pens that was fermented at air-temperature. Collected digested slurry was transported from pig farms to a storage tank shown in Figure 4-3 installed nearby the experimental paddy field. The digested slurry was sampled at the first additional fertilization on 20 December 2012. Main properties of the digested slurry were: pH of 7.05, EC of 0.32 S m^{-1}, TKN of 885 mg L^{-1}, NH_4-N of 322 mg L^{-1}, NO_3-N of less than 0.01 mg L^{-1}, PO_4-P of 32.7 mg L^{-1}, K^+ of 213 mg L^{-1}, *E. coli* of 3.6E+07 CFU 100 mL^{-1} and Coliforms of 5.40E+07 CFU 100 mL^{-1}. Nitrogen, phosphorus and potassium concentrations of this digested slurry was analyzed again at the second additional fertilization on 8 January 2013, and the values were TKN of 566 mg L^{-1}, and NH_4-N of 449 mg L^{-1}, PO_4-P of 9.92

Figure 4-1 Experimental plots

Figure 4-2 Biogas digester in a pig farm

Figure 4-3 Storage tank of digested slurry

mg L^{-1} and of K^+ of 236 mg L^{-1}. At the third additional fertilization, the analysis of nitrogen concentrations was failed to be conducted.

4.2.2 Rice cultivation schedule and fertilization design

Rice cultivation was conducted based on the customary cultivation schedule in Thai My Village. Rice cultivar was "OM7347" and sowed directly in the ponded field on 11 December 2012. Additional fertilization was applied 3 times on 20 December 2012, 8 January 2013 and 22 January 2013. Chemical fertilizers were applied onto the surface water, and digested slurry was applied through rice plants using a bucket onto the surface water. Harvesting was conducted on 13 March 2013. Fertilization design is shown in Table 4-1, and planned and actual application rate of fertilizers is shown in Table 4-2. Application rate of digested slurry was decided based on the nitrogen concentrations in the digested slurry sampled and measured twice before the experiment with approximately 300 and 400 mg L^{-1} for NH_4-N and TKN, respectively. Because N concentrations in digested slurry were variable, the actual nitrogen application rate was different from originally planned one.

4.2.3 Sampling and analysis

Sampling of surface water was conducted mainly after fertilization during the flooded term, that is, on 11, 19, 20, 21, 22, 27 December 2012 and 9, 15, 23 January 2013. NH_4-N and NO_3-N were measured by the ion chromatograph (ICS-1500, Dionex), T-N was measured by the kjeldahl method and *E. coli* and Coliforms analyzed by the surface plating method using XMG agar (Nissuipharma).

Table 4-1 Fertilization design

Experimental Plot	20 December 2012 (The first additional fertilization)		8 January 2013 (The second additional fertilization)		22 January 2013 (The third additional fertilization)	
	Material	Fertilization rate ha^{-1}	Material	Fertilization rate ha^{-1}	Material	Fertilization rate ha^{-1}
CF	Mixed fertilizer of NPK[a]	150 kg	Urea	100kg	Urea	50 kg
	Phosphorus fertilizer	400 kg				
MF(NH_4-N)	Slurry	1.0×10^5 L	Slurry	1.5×10^5 L	Slurry	0.6×10^5 L[b]
MF(T-N)	Slurry	0.8×10^5 L	Slurry	1.2×10^5 L	Slurry	0.5×10^5 L

[a] Components of mixed fertilizer of NPK are N: P_2O_5: K_2O=20: 20: 15,
[b] Planned application rate: 0.8×10^5 L

Table 4-2 Planned and actual application rate of fertilizers

	Planned fertilization rate[a] (kg ha^{-1})			Actual fertilization rate[b] (kg ha^{-1})		
	N	P_2O_5	K_2O	N	P_2O_5	K_2O
	T-N (NH_4-N)			T-N (NH_4-N)		
CF	100	94	47	100	94	47
MF (NH_4-N)	132 (99)	-	-	209 (128)	12	86
MF(T-N)	100 (75)	-	-	166 (102)	10	69

[a] Application rate of each fertilizer was planned focusing on nitrogen application rate

[b] Actual fertilization rate was calculated by analyzed values of N, P and K in the slurry and applied volume of slurry at each fertilization. Analyzed values of the slurry at the second fertilization were also used as the concentrations of N, P and K for the actual fertilization rate at the third additional fertilization

Samples of surface soil were collected at a depth of 0-10 cm before seeding, after harvesting and mainly after fertilization, that is, on 11, 19, 20, 21, 27 December 2012 and 8, 9, 15, 22, 29 January 2013 and 13 March 2013. NH_4-N in soil was extracted with 10% KCL solution (volume of KCL solution: dry weight of soil was 10:1), and measured by the indophenol blue colorimetric method (Hidaka 1997) with a spectrophotometer (U-1900, Hitachi). NO_3-N in the soil was extracted with diluted water (volume of distilled water: dry weight of soil was10:1), and measured by the ion chromatographic method (Kihou 1997) with ion chromatograph (ICS-1500, Dionex). *E. coli* and Coliforms in the surface soil were analyzed by the overlaying method using XMG agar (Nissuipharma).

Yield and yield components, namely height of plants, numbers of ears per 1 m^2, numbers of grains per ear and total nitrogen content of unhulled rice, were measured at harvest. Yield was calculated as the weight of unhulled rice with moisture of 15%w.b. Protein content of rice was calculated based on the values for total nitrogen (Nakamura and Yuyama 2005) analyzed by CHNS-Analyzer (Euro EA 3000, Euro Vector).

4.3 Results and discussion

4.3.1 Influence on rice production of digested slurry

Table 4-3 shows the yield and yield components. Although it would be difficult to make statistically rigid arguments due to the few number of data, the results in Table 4-3 might suggest the following points.

There was no statistically-significant difference (*t*-test, α=0.05) among the experimental plots in yield, years per 1 m^2 and gains per ear. Protein content of rice derived from T-N content in

rice was highest in the following order; MF(NH_4-N), MF(T-N) and CF. A higher content of protein in rice decreases the flavor (Ueno et al. 2011), so the flavor of the rice would not be inferior with the use of digested slurry as a fertilizer, but it may become inferior in case nitrogen application rate is increased.

According to Table 4-2, application rate of T-N became approximately twice in MF(NH_4-N) and 1.7 times in MF(T-N) larger than in CF, and approximately 1.3 times in MF(NH_4-N) larger than in MF(T-N) and CF as a result of the fluctuations in nitrogen concentrations of digested slurry of the biogas digester in pig farm.

From the above, it can be concluded that nitrogen in digested slurry can substitute for chemical fertilizers. The lower application rate of digested slurry for rice production same to conventional cultivation would be desirable to reduce the risk of nitrogen loads from paddy fields to lower water bodies.

4.3.2 Fate of nitrogen in the field after fertilization

Figure 4-4 (a) and (b) show the fate of T-N and NH_4-N in the surface water, respectively. NO_3-N was very low in the surface water (below 0.5 mg L^{-1}) during cultivation, so the values are omitted from the graph. Extreme high values of T-N observed on 23 January may be derived from a disturbance of surface soil at sampling or contamination with suspended matter in the surface water. T-N and NH_4-N in the surface water increased after the additional fertilization. T-N levels were high in all plots, more than 20 mg L^{-1} even 1 week after the first additional fertilization. Whereas, T-N in the surface water of CF decreased to less than 10 mg L^{-1} in 1 week after the second additional fertilization though both MF plots were over 10 mg L^{-1}. NH_4-N in the surface water for MF(NH_4-N) and MF(T-N) were over 10 mg L^{-1} even 1 week after the first additional fertilization, and remained over 5 mg L^{-1} during cultivation though NH_4-N in the surface water of CF gradually decreased to below 3.0 mg L^{-1}, and did not show any remarkable increase after that. The concentrations were higher for MF(NH_4-N) than MF(T-N). This may partly be because of the decomposition of organic nitrogen in the digested slurry after application to the field. More examination is required to estimate the appropriate duration for prevention of surface discharge from the plots with digested slurry applied to prevent nitrogen pollution of lower water bodies.

Table 4-3 Yield and yield components

Experimental Plot	Yield kg ha^{-1}	Plant height cm	Ears m^{-2}	Grains ear^{-1}	T-N %	Protein %
CF	10,176±294	86±5	761±72	89±17	1.51	8.97
MF(NH_4-N)	11,751±1,228	88±4	622±22	133±3	1.53	9.12
MF(T-N)	9,489±544	95±4	806±150	151±36	1.51	9.01

Remark: n=1 in T-N and protein, n=2 in yield, ears m^{-2} and grains ear^{-1}, n=10 in plant height

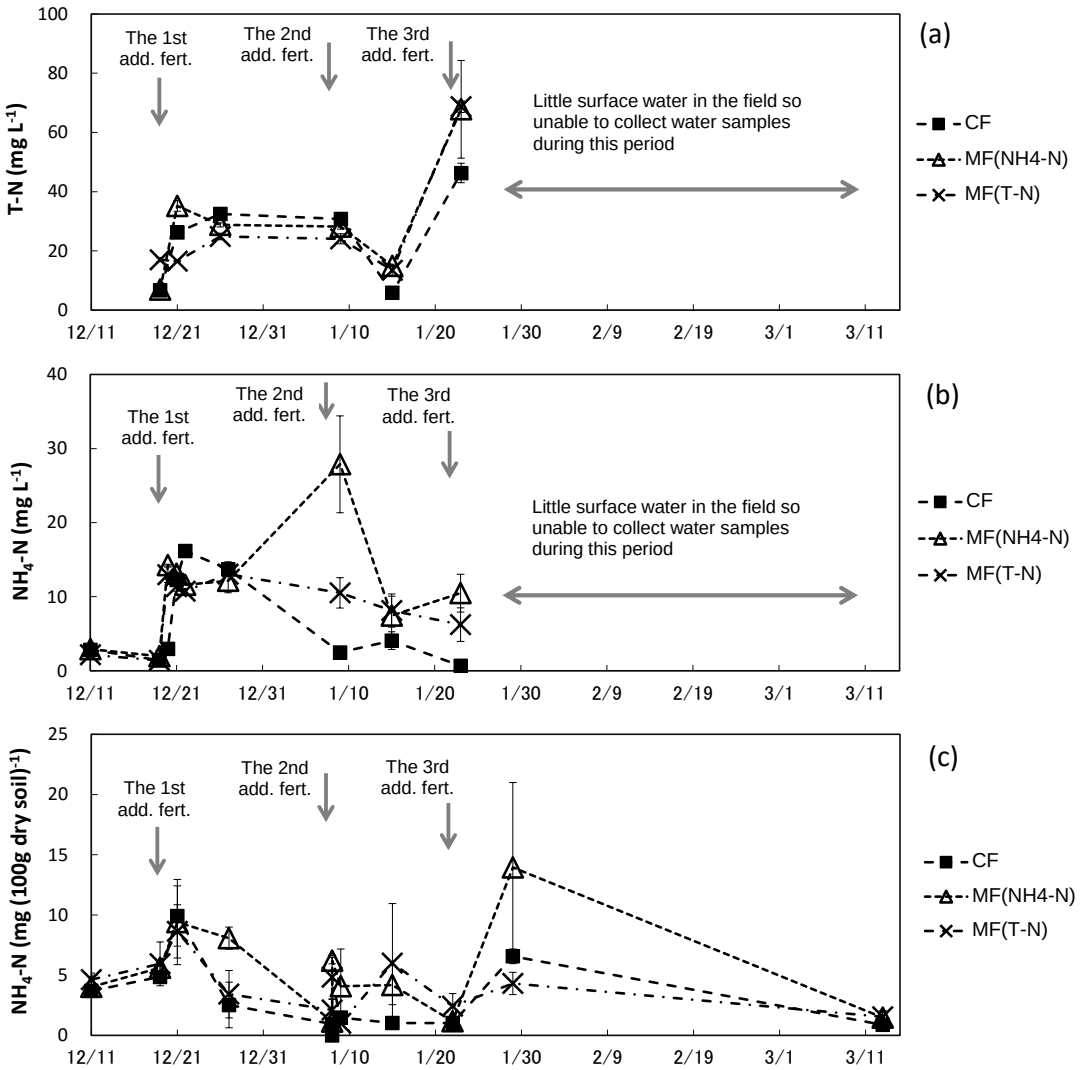

Figure 4-4 (a) T-N in surface water, (b) NH_4-N in surface water, (c) NH_4-N in surface soil (n=2)

Figure 4-4 (c) shows the fate of NH_4-N in surface soil. NO_3-N in surface soil was also very low (below 2.0 mg (100 g dry soil)$^{-1}$) during cultivation, similar to the surface water, so it is omitted from the graph. NH_4-N in the surface soil increased after fertilization and then gradually decreased. The value was higher in MF(NH_4-N) than CF throughout the cultivation.

4.3.3 Fate of *E. coli* and Coliforms in the field after fertilization

Figure 4-5 (a) and (b) show the fate of *E. coli* and Coliforms in surface water, respectively. *E. coli* and Coliforms in surface water at MF(NH_4-N) and MF(TN) increased to a maximum of 1.0E+07 CFU 100 mL^{-1} after application of digested slurry, but decreased below non-detectable levels (less than 1.0E+02 CFU 100 mL^{-1}) within a week and did not show subsequent increases. This result is

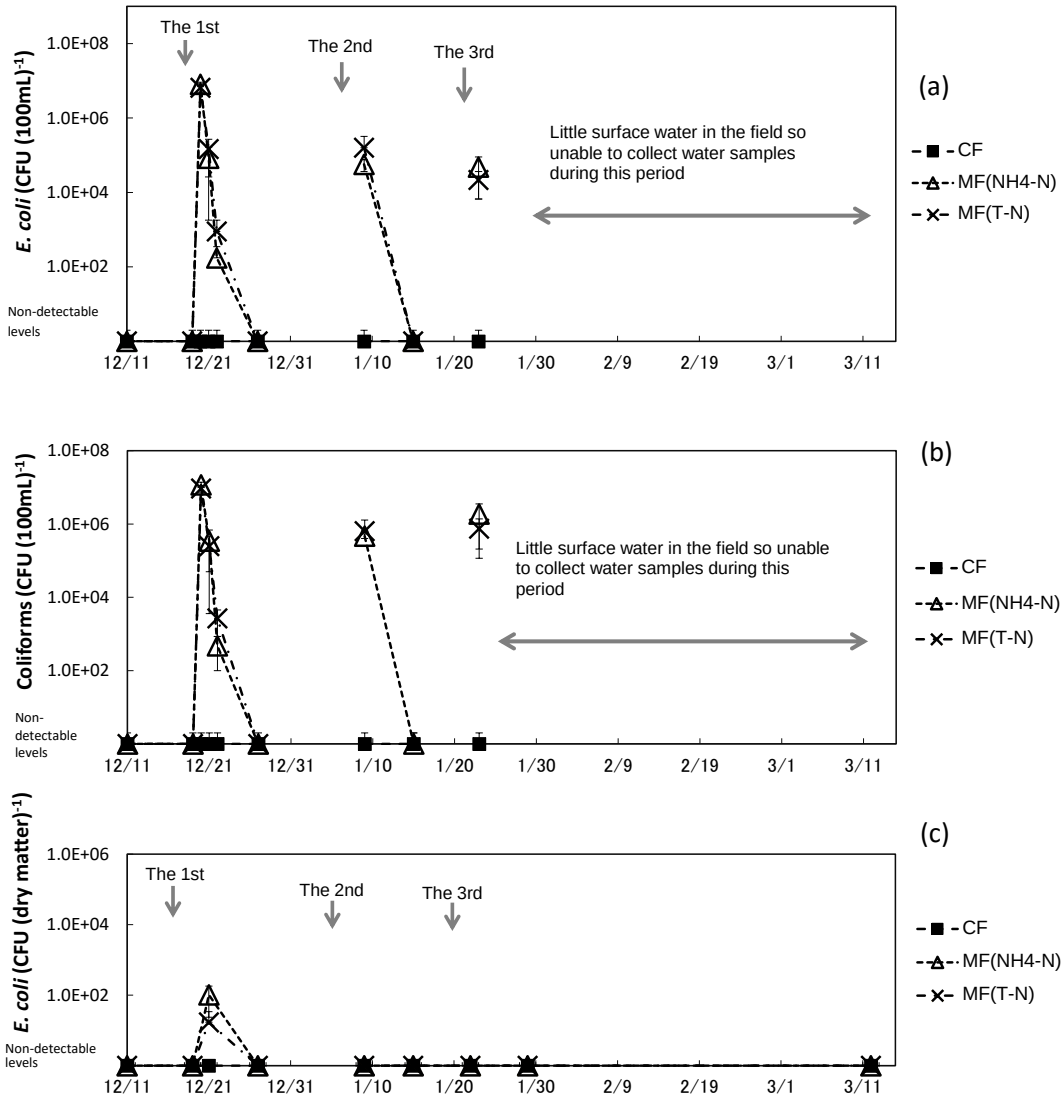

Figure 4-5 (a) *E .coli* in surface water, (b) Coliforms in surface water, (c) *E. coli* in surface soil.

similar to the findings by Ueda et al. (2003), who conducted experiments by applying unchlorinated secondary effluent from sewage treatment works to the paddy field model, and showed that fecal coliforms in the surface water of the paddy field model decreased 0.6 log day^{-1} and below 1.0E+03 CFU 100 mL^{-1} which was the WHO guideline on wastewater reuse for unrestricted irrigation (Mara and Cairncross, 1989) within a week, and concluded that the reason may being the exposition of UV radiation or increases in pH of surface water during photosynthesis of rice plants (Ueda et al. 2003). From this, at least 1 week of prevention of surface discharge from the plots with digested slurry applied is needed to prevent fecal contamination of lower water bodies.

Figure 4-5 (c) shows the fate of *E. coli* in the surface soil. *E. coli* in MF(NH_4-N) and MF(T-N) showed a slight increase (1.0E+02 CFU g^{-1}) with the first application of digested slurry.

However, it decreased to a non-detective level (less than 1.0E+01 CFU g^{-1}) within a week and no subsequent increase was observed during cultivation. The reason for decreasing of *E. coli* and Coliforms were not investigated certainly in this experiment, but lower pH value of less than 4, other bacteria or protozoa in the soil would reduce *E. coli* and Coliforms.

Coliforms in the surface soil showed a similar trend as *E. coli* until 22 January 2013, but increased again after 22 January 2013 (omitted from the graph). Considering the trends of *E. coli*, increases in Coliforms are not likely from digested slurry, so will be investigated in a future study.

4.4 Conclusions

Fertilizer effects of digested slurry on rice, the fates of nitrogen components and fecal indicator microbes in surface water after application of digested slurry as an additional fertilizer was investigated with the field experiment at the site with comparisons of chemical fertilizer treatments to evaluate the feasibility of use of digested slurry as a fertilizer in paddy fields in Southern Vietnam.

There were no statistically-significant differences between the plots with digested slurry applied and the plots with chemical fertilizers applied in yield and yield components, so digested slurry can be substituted for chemical fertilizer with no bad effects on the rice, and the lower application rate of digested slurry for rice production same to conventional cultivation would be desirable to reduce the risk of nitrogen loads from paddy fields to lower water bodies.

T-N in surface water of the plots with digested slurry applied were greater than 20 mg L^{-1} in 1 week after the first additional fertilization and more than 10 mg L^{-1} in 1 week after the second fertilization. NH_4-N in surface water was greater than 10 mg L^{-1} in 1 week after the first additional fertilization, and remained over 5 mg L^{-1} during cultivation. From this results, more examination is required to estimate the appropriate duration for prevention of surface discharge from the plots with digested slurry applied to prevent nitrogen pollution of lower water bodies.

E. coli and Coliforms in surface water of the plots with digested slurry applied increased just after application of digested slurry, but decreased to non-detectable levels within a week. *E. coli* and Coliforms in the surface soil showed similar trends. Based on these results, at least 1 week of prevention of surface discharge from the plots with digested slurry applied is needed to prevent fecal contamination of lower water bodies.

References

Hidaka N (1997) Soil Chemistry-Nitrogen. In: Committee of Soil Environment Analysis (ed). Methods for soil environment analysis. Hakuyu-sha, Tokyo. Japan.

Kihou N (1997) Instrumental Analysis-Ion chromatograph method. In: Committee of Soil Environment Analysis (ed). Methods for soil environment analysis. Hakuyu-sha, Tokyo. Japan.

Mara DD and Cairncross S (1989) Guidelines for the safe use of wastewater and excreta in agriculture and aquaculture. World Health Organization, Geneva.

Nakamura M and Yuyama Y (2005) Development of a composition database for various types of biomass, Tech. Rep. Nat. Inst. Rural Eng. 203:57-80.

Ueda T, Ishida K, Hata K, Matsumori K, Fate of indicator microorganisms in wastewater reuse for paddy field irrigation. Proceedings of the IWA Asia-Pacific Regional Conference, 489, Bangkok, Thailand, October 2003.

Ueno N, Ishii T, Hanagata T (2011) Effect of protein content of brown rice on eating quality of rice. Bull. Kanto Branch Crop Sci. Soc. Jpn. 26:46-47.

USDA (2010) Keys to soil taxonomy –Eleventh Edition 2010, US Government Printing Office, p. 167

CHAPTER 5

Feasibility of use of digested slurry in paddy fields from economical aspect

5.1 Introduction

Application of digested slurry to paddy fields requires higher costs and larger burdens on labor than chemical fertilizers because larger volume of digested slurry has to be conveyed to satisfy equivalent nutrient demands supplied by chemical fertilizers. To make feasible the use of digested slurry in paddy fields, economical transportation and application methods of digested slurry should be proposed. In this chapter, demonstration of transportation and application of digested slurry is conducted, and time, labor, fuel consumption, etc. for each procedure are monitored. The costs of application of digested slurry are compared to chemical fertilizers, and feasibility of use of digested slurry is evaluated from economical aspects.

5.2 Materials and methods

5.2.1 Digested slurry used for this study

A study site was Thai My Village, Cu Chi District in Ho Chi Minh City. There were approximately 111 small scale biogas digesters with fermentation tank capacities of 7.8±1.2 m^3 in the study area as mentioned in Chapter 3. Digested slurry for the experiments was taken from household scale biogas digesters of adjacent two pig farms for each slurry application in Thai My Village. The distance between the experimental field and pig farms was 5.3 km. Each location is shown in Figure 5-1. The digesters ferment pig manure and pig pen washing water at air temperature. Properties of the digested slurry are shown in Table 5-1. Because large volumes of washing water enter the biogas digesters, nitrogen concentrations in the digested slurry are lower when compared to ordinary digested slurry in Japan with a range of 1,000－3,000 mg L^{-1} of T-N (Nakamura et al. 2012).

5.2.2 Prototype slurry tanker

Vehicles for transportation of digested slurry are rarely available in rural areas of Vietnam. Therefore, an original prototype slurry tanker was manufactured with assemblage of a 3 m^3 plastic tank, tractor trolley, motor pump and generator. Details including dimensions, specifications and price of the equipment are shown in Table 5-2. Total cost of the prototype slurry tanker was 3,554 USD. This cost does not include the cost for assemblage because farmers can do it themselves. Materials are commonly available on-site. The prototype slurry tanker was towed by a 55 HP (horsepower) tractor. Tractors are usually rented for farm work in the village. The rental fee of a tractor with an operator is 23.85 USD half-day^{-1} (half-day indicates 4 hours). Appearance of the prototype slurry tanker and tractor is shown in Figure 5-2.

5.2.3 Experimental field

Experiments were conducted in 300 m^2 plots as shown in Figure 5-3, set with plastic sheets in a paddy field of Binh Ha Dong, Thai My Village, Cu Chi District, Ho Chi Minh City (10º59'1978"N

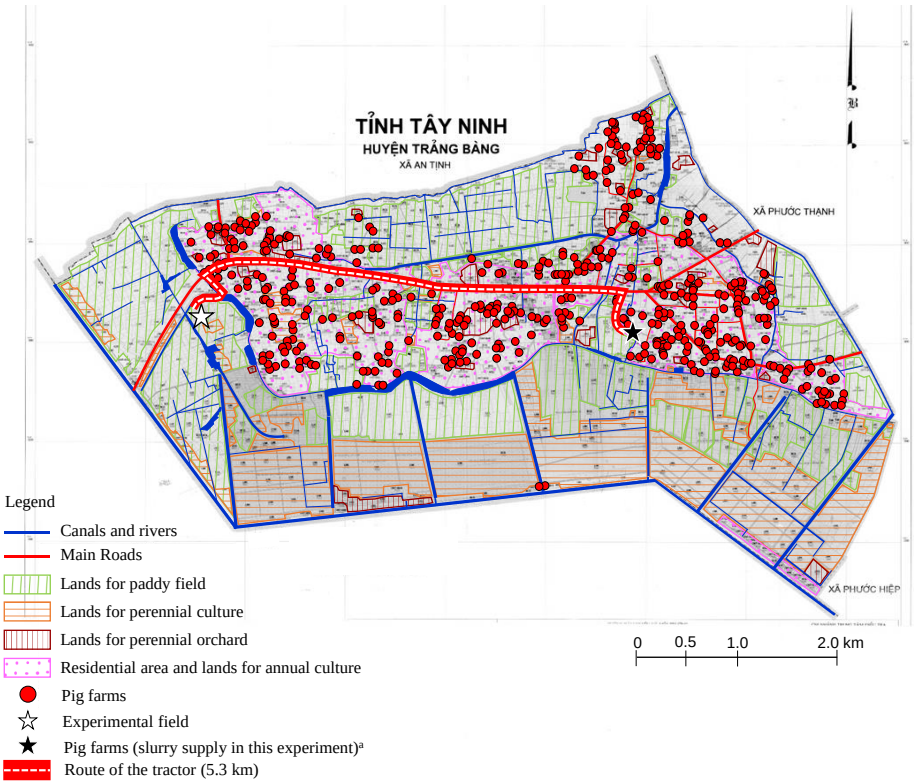

[a] Location of pig farms refer to Vision Tech Inc. (2011)

Figure 5-1 Location of the experimental field, the biogas digesters and pig farms in Thai My Village

Table 5-1 Properties of digested slurry and irrigation water

		pH	EC	T-N[a]	NH_4-N	NO_3-N	PO_4-P	K^+
			S m^{-1}	mg L^{-1}	mg L^{-1}	mg L^{-1}	mg L^{-1}	mg L^{-1}
The second additional fertilization (10 May)	Slurry	-	-	472	305	-	-	-
	Canal water	-	-	11	2	-	-	-
The third additional fertilization (31 May)	Slurry applied by 1st shuttle	7.3	0.39	312	255	<0.01	28.7	192
	Slurry applied by 2nd shuttle	7.0	0.33	264	243	<0.01	30.5	171
	Canal water	5.7	0.01	12	N.D.[b]	<0.01	N.D.	-

[a] Values for T-N in this table are actually for total kjeldahl nitrogen (TKN), but the values of NO_3-N are negligible as shown above.
[b] N.D. Not-Detected. (less than 0.2 mg L^{-1})

Table 5-2 Equipment used for pouring digested slurry

(a) Equipment for prototype slurry tanker

Machine/ Equipment	Machine model	HP[a]	Fuel variety	Application	Dimension Capacity/Specifications	Initial investment cost (USD)[b]
Plastic tank	-	-	-	Stocking digested slurry	Overall dimension: (H) 1,270 x (W) 1,360 x (L) 2,280 (mm) Total capacity: 3 m^3 (Available capacity: 2.7 m^3)	143
Tractor trolley	-	-	-	Loading tank	Overall dimensions: (W) 1,500 x (L) 2,800 (mm) Tire size: (Φ) 825 x (W) 160 (mm)	1,670
Motor Pump	PENTAX DX100/2G	1.75	-	Collection and pouring of digested slurry	Characteristic curve Q: 0, 6, 12, 18 H: 9.8, 8.3, 6.3, 3.5 Q: Quantity (m^3 h^{-1}), H: Head (m)	372
Generator	HONDA HG 7500 SE	13	Gasoline	Collection and pouring of digested slurry	220V, 6.0kW, Equipped with the engine of HONDA GX390	1,369
Initial investment cost for prototype slurry tanker (Total of above equipment costs)						3,554

[a] HP: Horsepower of machine
[b] Data for the costs of equipment were obtained by on-site interviews of farmers and villagers.

Table 5-2 Equipment used for pouring digested slurry (Continued)

(b) Other equipment

Machine/ Equipment	Machine model	HP	Fuel variety	Use application	Remarks	Cost (USD)
Tractor	FORD 4000	55	Diesel oil	Traction of prototype slurry tanker	Rental fee of a tractor for half-day[a]	23.85
Vacuum truck	-	-	Diesel oil	Collection, transportation and pouring of digested slurry	Rental fee of vacuum truck for 1 day[b] Available capacity of tank of vacuum truck : 5.5 m^3	71.55
Engine Pump	B80NT	5.5	Gasoline	Pouring irrigation water into the field[c]	Equipped with a HONDA GX160 engine	Owned by farmers

[a] Rental fee of a tractor including operation and maintenance costs, fuel cost and labor cost for 1 operator. "Half day" indicates 4 hours.
[b] Rental fee of a vacuum truck including operation and maintenance costs, fuel cost and labor cost for 2 operators. "1 day" indicates 8 hours.
[c] Engine pump prepared not only for the irrigation with slurry fertilization, but used for ordinary general agricultural works.

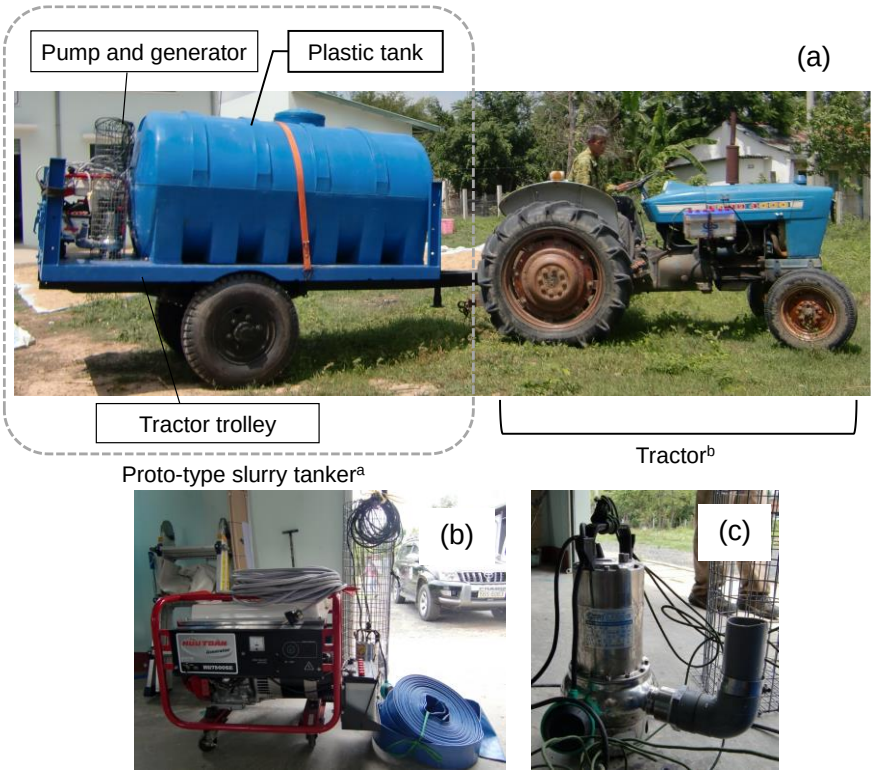

[a] Prototype slurry tanker manufactured by assemblage of plastic tank, tractor trolley, generator and pump
[b] Tractor rented every time for fertilization

Figure 5-2 (a) Whole pictures of the prototype slurry tanker and tractor for towing, (b) Generator, (c) Motor pump

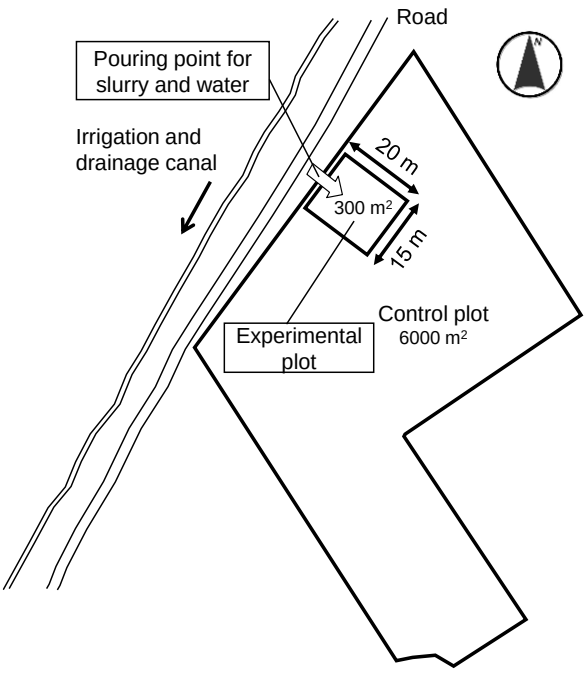

Figure 5-3 Diagram of experimental field

106º22'0857"E) (Figure 5-1). In this village, pig farming and rice cultivation are common. A control plot was also set outside the experimental plot shown in Figure 5-3 and was conventionally cultivated using chemical fertilizers.

Areas containing the experimental fields were located in low-lying lands and rice cultivation conducted twice a year in most paddy fields. The soil was Typic Sulfaquepts (USDA 2010). Main properties of the soil in the experimental fields were: pH of 3.93, EC of 0.016 S m^{-1}, T-N of 3.9 g kg^{-1}, T-C of 49.4 g kg^{-1}, NH_4-N of 1.81 mg $100g^{-1}$ and less than 0.1 mg 100 g^{-1} of NO_3-N.

5.2.4 Cultivation schedule and fertilization method

Experiments were conducted during the rainy season from April to July 2013. Rice cultivar was "OM6976" and sowed directly in the flooded field on 12 April 2013. Fertilization was conducted as shown in Table 5-3. Schedules and rates of each chemical fertilizer application were based on on-site conventional cultivation. First and second additional fertilizations were conducted when rice was in the tillering stage and the third additional fertilization was done just before the booting stage. Fertilization dates and nitrogen application rates for the experimental plot were planned the same as the control, but the first additional fertilization on 25 April 2013 was postponed because the rice plants were too small. Therefore, application for the first additional fertilization was distributed with the second and the third additional fertilizations. An estimated T-N of 400 mg L^{-1} in the

digested slurry was used to calculate the application rate of nitrogen for the experimental plot. The actual nitrogen application rates were as shown in Table 5-3 based on the nitrogen concentrations in digested slurry shown in Table 5-1.

For both the second and the third additional fertilizations for the experimental plot, digested slurry was applied with irrigation water from the road side of the field as shown in Figure 5-3.

The second additional fertilization was conducted with a vacuum truck. A vacuum truck is ordinarily used for the collection and transportation of sludge from septic tanks of households. The truck had a capacity of 5.5 m^3 of digested slurry as shown in Figure 5-4 and Table 5-2(b). Figure 5-5 showed the application of digested slurry with the truck.

The third additional fertilization was conducted with the prototype slurry tanker used for transportation and application of digested slurry. Figure 5-6 showed the application of digested slurry with the prototype slurry tanker. The reason why a vacuum truck and a proto-type slurry tanker were used in the second and third additional fertilization was to obtain the data of both types of vehicle for estimation of the cost and labor.

Harvest was conducted on 21 July for the control plot and 26 July for the experimental plot.

Table 5-3 Fertilization design for field experiment

		Experimental plot			Control plot		
	Application rate for digested slurry	Application rates for N, P_2O_5 and K_2O as digested slurry			Application rates for N, P_2O_5 and K_2O as chemical fertilizers[a]		
		N	P_2O_5	K_2O	N	P_2O_5	K_2O
Fertilization	m^3 m^{-2}	g m^{-2}	g m^{-2}	g m^{-2}	g m^{-2}	g m^{-2}	g m^{-2}
The first (25 April)	-	0.0	0.0	0.0	4.6	8.0	0.0
The second (10 May)	1.67 x 10^{-2}	7.9	1.9[b]	6.0[c]	4.0	4.0	3.0
The third (31 May)	1.09 x 10^{-2}	3.1	0.7	2.4	2.0	2.0	3.9
Total	2.76 x 10^{-2}	11.0	2.6	8.4	10.6	14.0	6.9

[a] Variety and rate of chemical fertilizers applied on each fertilization day were as follows;
1) Urea of 10 g m^{-2} and phosphorus fertilizer of 50 g m^{-2} applied on 25 April 2013.
2) Mixed fertilizer of N: P_2O_5: K_2O=20: 20: 15 for 20 g m^{-2} applied on 10 May 2013.
3) Mixed fertilizer of N: P: K=20: 20: 15 of 10 g m^{-2} and potash fertilizer of 4 g m^{-2} applied on 31 May 2013.
[b] Data of phosphate concentrations in digested slurry used for second additional fertilization could not be obtained. Therefore, rate was calculated based on the ratio of phosphate concentrations to total nitrogen concentrations for the third additional fertilization.
[c] Data of potassium concentrations in digested slurry used for second additional fertilization could not be obtained. Therefore, rate was calculated based on the ratio of potassium concentrations to total nitrogen concentrations for the third additional fertilization.

Figure 5-4 Photograph of vacuum truck

Figure 5-5 Application of digested slurry with the vacuum truck

Figure 5-6 Application of digested slurry with the prototype slurry tanker

5.2.5 Survey and analysis

At the second additional fertilization day on 10 May 2013, working procedures needed for pouring digested slurry and time for each procedures during fertilization was recorded. At the third additional fertilization day on 31 May 2013, working procedures needed for pouring digested slurry, time, fuel and costs consumed for each procedure during fertilization were recorded. Data of hourly wages for agricultural activities, price and components of each chemical fertilizer used for conventional cultivation and fuel prices were obtained by interviews of farmers and villagers.

At harvest, yield and yield components such as height of plants, numbers of ears per 1 m^2, numbers of grains per 1 ear were measured. At harvest, the experimental plot was divided into 12 meshes and harvested unhulled rice in each mesh was weighed and converted to yield at moisture of 15%w.b. For grains per ear and plant height, 10 rice plants from each mesh were sampled and

measured. Ten rice plants were sampled from three points in the control plot and measured for grains per ear and plant height. Then, all remaining rice in the control plot was harvested all together using a combine and the yield in the control plot was obtained. T-N content of rice grains was analyzed with a NC-Analyzer (SUMIGRAPH NC-220, SCAS). T-N content of rice plants was analyzed with a NC-Analyzer (Euro EA 3000, Euro Vector).

During cultivation, precipitation was recorded with a rain gage (OW-34-BP, Ota Keiki) equipped with a data logger (UIZ3639, UIZIN).

5.3 Results and discussion

5.3.1 Rice production with the use of digested slurry by pouring method

Yield and yield components for the experimental and control plots are shown in Table 5-4. Yield in the experimental plot was 485 g m^{-2}, within the range of 300－500 g m^{-2} for on-site conventional cultivation (Oritate et al. 2015) and yield for Ho Chi Minh City was 392 g m^{-2} (General Statistics Office Vietnam 2011). However, a yield of 299 g m^{-2} for the control plot was lower than the values for on-site conventional cultivation. As shown in Table 5-3, nitrogen was applied earlier in the control plot compared to the experimental plot. Therefore, there would be abundant nitrogen in the control plot, so, the vegetative growth stage may have lasted longer in control plot than in the experimental plot. This may result in the smaller yield in the control plot. Rice production in the experimental plot showed that digested slurry can be substituted as the chemical fertilizer for rice production.

5.3.2 Work procedures, fuel consumption and labor for application of digested slurry

Slurry needed for the second and third additional fertilizations of the experimental plot was 5.0 m^3

Table 5-4 Yield and yield components in experimental plot and control plot

		Yield	Ears per 1m^2	Grains per 1 ear	Plant height	Nitrogen content of rice grain	Nitrogen content of rice plants
		g m^{-2}	Ears m^{-2}	Grains ear^{-1}	cm	%	%
Experimental plot	Average	485 (n=12)	232 (n=12)	63 (n=120)	83.3 (n=119)	1.8 (n=12)	4.9 (n=12)
	SD.	187	107.6	24.9	10.7	0.3	0.6
Control plot	Average	299	483 (n=3)	32 (n=30)	91.8 (n=30)	1.9 (n=1)	3.0 (n=3)
	SD.	-	101.9	22.7	12.5	-	0.5

and 3.26 m^3, respectively. Slurry was transported by 2 shuttles of the prototype slurry tanker (available capacity of 2.7 m^3) for the third additional fertilization and 1 vacuum truck for the second additional fertilization (available capacity of 5.5 m^3). Slurry was collected from biogas digesters of pig farms in Thai My Village. Slurry and irrigation water were applied based on previous studies (Koga et al. 2010; Mihara et al. 2011; Kamioka and Kamewada 2011; Iwashita et al. 2008). At both additional fertilizations, digested slurry and irrigation water were poured together until the increase of 4－5 cm of water level. Water level could not be decreased to shallow ponding conditions proposed by Iwashita et al. (2008) such as a water level of 0 cm (Koga et al. 2011) or 0.3 cm (Mihara et al. 2011) just before the second additional fertilization. By contrasts, just before the third additional fertilization, field conditions before application of digested slurry were dryer than the same conditions. for the third additional fertilization, because of poor irrigation and drainage conditions in the paddy field, and low precipitation before the third additional fertilization as shown in Figure 5-7. Pouring rate of digested slurry was 2.98 L s^{-1} for the second additional fertilization and 4.62 L s^{-1} for the third additional fertilization as shown in Table 5-5. Pouring rate of digested slurry that we used was faster than the 2.3 L s^{-1} of Mihara et al. (2011) and 0.48 L s^{-1} of Kamioka and Kamewada (2011). Irrigation water was poured at a rate of 6.07 L s^{-1} even though Kamioka and Kamewada (2011) used a rate of 3.3 L s^{-1}. Both pouring rates in this study were based on the capacity of each pump. For spatial distribution of digested slurry in paddy fields, the flow rates shown in the past studies such as by Koga or Mihara are advantageous. On the other hand, large flow rate such as in this study is advantageous for work efficiency.

One worker and one operator for the tractor and two operators for the vacuum truck were engaged for collection, transportation and pouring of the digested slurry, and one worker took charge of the pouring of irrigation water. The data obtained for slurry fertilization was compiled as shown in Table 5-5. Labor costs for agricultural work was 1.19 USD h^{-1} person, and gasoline price was 1.06 USD L^{-1}, these data were estimated as common to slurry fertilization for proto-type slurry tanker and vacuum truck. Time for preparation and withdrawal for collection of digested slurry and time for preparation and withdrawal for pouring digested slurry were estimated at 900 seconds for 1 shuttle, respectively. Similarly, time for preparation and withdrawal for irrigation water was estimated at 900 seconds for 1 shuttle. Time required for monitoring water level of paddy field was estimated as 20% of the running time of engine pump because the intermitted monitoring will be needed for the application of digested slurry to large area of paddy fields. Rental fee of a tractor for a half day was 23.85 USD. In the study site, 1 day indicates 8 hours. This cost includes fuel for the tractor and labor for 1 operator of a tractor. Rental fee of a vacuum truck for 1 day with 2 operators was 71.55 USD. This also includes fuel for vacuum truck and labor for 2 operators.

5.3.3 Work procedures, fuel consumption and labor for application of chemical

fertilizer

Chemical fertilizers were manually applied by workers. The time required for fertilization per unit weight of chemical fertilizers was 6.08×10^{-2} h kg^{-1} $person^{-1}$. Application rate for each fertilizer on each fertilization day was as shown in the notes under Table 5-3. The prices of fertilizers used for the control plot were surveyed. A motor-cycle was used for transportation of chemical fertilizers from the farmer's house to the field. Maximum weight of the chemical fertilizer transported by the motor-cycle was 50 kg. Ten minutes and 0.17 L of gasoline were consumed for transportation of 1 shuttle from the farmer's house to the experimental field. The plot was irrigated before application of chemical fertilizer for the third additional fertilization, because the surface of the field was dry. Data obtained are shown in Table 5-6.

5.3.4 Comparison of cost for fertilization

Cost for slurry fertilization was estimated based on data obtained from the experiments as shown in Table 5-2 and 5-3 to evaluate the feasibility of slurry fertilization from the viewpoint of economics. The estimation conditions were set as follows, and detail procedures of estimation is described in Appendix 2.

1) Application schedule and rates of fertilization are shown in Table 5-3.

2) Transportation distance was 2.5 km.

Although the actual distance was 5.3 km to the experimental plot, this distance was reduced to 2.5 km because both paddy fields and pig farms are distributed in the village as shown in Figure 5-1, and digested slurry would be transported from pig farms to the closest paddy fields.

3) T-N in the digested slurry was 400 or 2,000 mg L^{-1}

T-N of approximately 400 mg L^{-1} was the average value obtained in our previous study (Thang et al. 2011). T-N of 2,000 mg L^{-1} is a proposed value. Reduction of washing water for livestock sheds into the biogas digesters is expected to reach the plan value of 2,000 mg L^{-1}.

4) Surface water levels in the field before and after application of digested slurry and irrigation water were 0 cm and 4 cm, respectively.

These results show that an increase in nitrogen concentrations of digested slurry by a reduction in the entry of washing water from livestock sheds into the biogas digesters make slurry fertilization feasible.

Surface water levels before and after slurry fertilization were set at 0 cm and 4 cm for the third additional fertilization even though the experiments were conducted during the rainy season. Surface of the field at the third additional fertilization was dry. Therefore, surface water in the field can be assumed to be almost as dry as the third additional fertilization.

Table 5-5 Data obtained for slurry fertilization

(a) Data common to slurry fertilization for prototype slurry tanker and vacuum truck

No.	Category	Factor	Data
1	Price	Labor costs for agricultural work	1.19 (USD h^{-1} $person^{-1}$)
2		Gasoline price (Average price in May 2013)	1.06 (USD L^{-1})
3	Collection of digested slurry	Time for preparation and withdrawal for collection of digested slurry	900 (s $shuttle^{-1}$)[a]
4	Pouring of digested slurry	Time for preparation and withdrawal for pouring of digested slurry	900 (s $shuttle^{-1}$)
5	Pouring of irrigation water	Flow rate for pouring of irrigation water with engine pump	6.07 (L s^{-1})
6		Fuel consumption rate for engine pump during irrigation	8.91 x 10^{-4} (L s^{-1})
7		Time for preparation and withdrawal of irrigation water	900 (s)
8		Time for monitoring water level of paddy field[b]	20% of the running time of an engine pump

[a] "Shuttle" indicates the shuttle between the field and the biogas digester for slurry fertilization
[b] Timing of the monitoring may be intermittent

(b) Data for slurry fertilization with prototype slurry tanker

No.	Category	Factor	Data
1	Price	Rental fee of a tractor for half-day (with 1 operator)	23.85 (USD $4hours^{-1}$)
2	Transportation	Driving speed of a tractor (20 minutes required for transportation of 5.3 km.)	0.265 (km $min.^{-1}$)
3	Collection of digested slurry	Flow rate for collection of digested slurry with a motor pump on the prototype slurry tanker	3.08 (L s^{-1})
4		Fuel consumption rate for generator on the prototype slurry tanker to drive the motor pump for collection and pouring of digested slurry (Value is same for pouring of digested slurry)	9.94 x 10^{-4} (L s^{-1})
5	Pouring of digested slurry	Flow rate for pouring digested slurry with motor pump on the prototype slurry tanker	4.62 (L s^{-1})

(c) Data for slurry fertilization with a vacuum truck

No.	Category	Factor	Data
1	Price	Rental fee of a vacuum truck for 1day (with 2 operators)	71.55 (USD $8hours^{-1}$)
2	Transportation	Driving speed of a vacuum truck (Tractor speed was used)	0.265 (km $min.^{-1}$)
3	Collection of digested slurry	Flow rate for collection of digested slurry with vacuum truck	4.17 (L s^{-1})
4	Pouring of digested slurry	Flow rate for pouring digested slurry with vacuum truck	2.98 (L s^{-1})

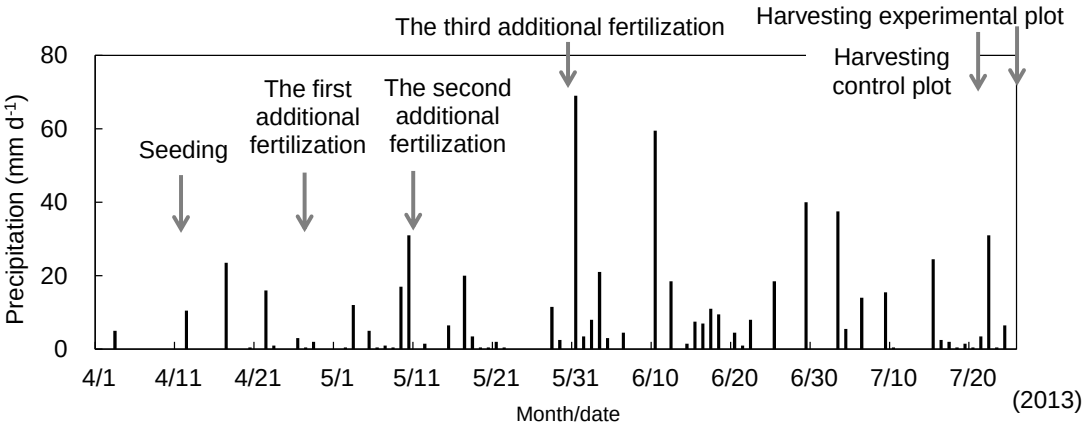

Figure 5-7 Precipitation during cultivation

Table 5-6 Data obtained for fertilization in conventional cultivation with chemical fertilizer

No.	Category	Factor	Data
1	Price	Labor costs for agricultural work	1.19 (USD $h^{-1}person^{-1}$)[a]
2		Gasoline price (Average price in May 2013)	1.06 (USD L^{-1})[a]
3		Mixed fertilizer of NPK	0.72 (USD kg^{-1})
4		Urea	0.48 (USD kg^{-1})
5		Phosphorus fertilizer	0.14 (USD kg^{-1})
6		Potash fertilizer	0.50 (USD kg^{-1})
7	Transportation	Time for transportation between the field and farmer's house with a motor-cycle	10 (minutes)
8		Fuel consumption rate of a motor-cycle	1.7×10^{-2} (L $min.^{-1}$)
9		Maximum weight of chemical fertilizer transported with a motor-cycle	50 (kg $shuttle^{-1}$)
10	Application	Time for fertilization per weight of chemical fertilizer and per one workers	6.08×10^{-2} (h kg^{-1} $person^{-1}$)
11	Pouring of irrigation water in the field	Flow rate for pouring irrigation water with the engine pump	6.07 (L s^{-1})[a]
12		Fuel consumption rate for engine pump during irrigation	8.91×10^{-4} (L s^{-1})[a]
13		Time for preparation and withdrawal for pouring of irrigation water	900 (s $shuttle^{-1}$)[a]
14		Time for monitoring of water level of paddy field[b]	20% of the running time of the engine pump

[a] Data is same as for slurry fertilization.
[b] Timing of the monitoring may be intermittent

The estimation is summarized in Figure 5-8. Costs for fertilization by conventional cultivation with chemical fertilizer was estimated as 0.06 USD m^{-2}. However, slurry fertilization with the prototype slurry tanker cost 0.13 USD m^{-2} and slurry fertilization with a vacuum truck cost

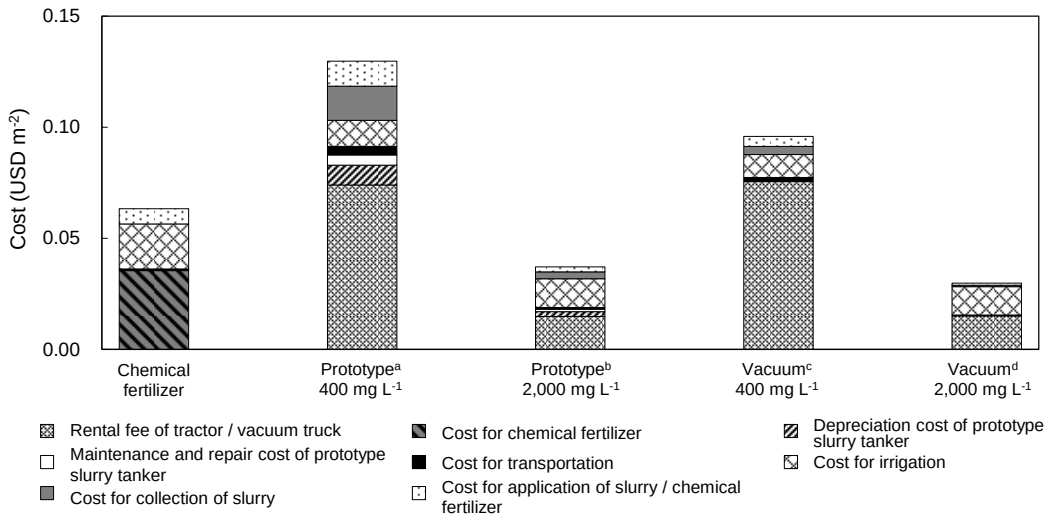

[a] "Prototype 400 mg L^{-1}" indicates slurry fertilization with the prototype slurry tanker at a nitrogen concentration of 400 mg L^{-1}
[b] "Prototype 2,000 mg L^{-1}" indicates slurry fertilization with the prototype slurry tanker at a nitrogen concentration of 2,000 mg L^{-1}
[c] "Vacuum 400 mg L^{-1}" indicates the slurry fertilization with the vacuum truck at a nitrogen concentration of 400 mg L^{-1}
[d] "Vacuum 2,000 mg L^{-1}" indicates slurry fertilization with the vacuum truck at a nitrogen concentration of 2,000 mg L^{-1}

Figure 5-8 Cost comparisons for fertilization

0.10 USD m^{-2} under the current situation of T-N of 400 mg L^{-1} in the digested slurry. The increase in T-N in the digested slurry from 400 to 2,000 mg L^{-1} drastically reduced the costs for slurry fertilization. Costs for slurry fertilization with both the vacuum truck and the prototype slurry tanker were lower than the costs for chemical fertilizers. Costs for slurry fertilization with a vacuum truck were lower than the costs with the prototype slurry tanker, because the vacuum truck can transport larger volumes of digested slurry at one time. However, the use of prototype slurry tankers to transport digested slurry can be economical because vacuum trucks are rarely available in rural areas of Vietnam.

5.4 Conclusions

In this study, digested slurry was applied by the pouring method as additional fertilizer to evaluate the feasibility of the use of digested slurry in paddy fields of Southern Vietnam. Data-related costs and labor for application of digested slurry and rice production by this method were obtained and compared with applications of chemical fertilizers.

Rice production with the use of digested slurry was 485 g m^{-2}, which is within the range of on-site conventional cultivation with chemical fertilizers. Therefore, it was shown that digested

slurry can be substituted for chemical fertilizers for rice production.

T-N concentrations from 400 to 2,000 mg L^{-1} in the digested slurry showed that the cost for slurry fertilization can be reduced to less than the cost for chemical fertilizers.

A reduction in washing water can produce nitrogen concentrations of 2,000 mg L^{-1} in the digested slurry. For this, large volume of washing water after flashing out the pig manure should be separated from influent to a biogas digester. The separated washing water could be treated by natural purification such as by soil and plants.

Experiments and estimations in this study clarify the feasibility of slurry fertilization in Southern Vietnam.

References

General Statistics Office Vietnam (2011) Statistical Yearbook of Vietnam 2011, Statistical Publishing House, Hanoi

Iwashita K, Fukushi K, Sugita H, Yuge K, Tanaka M and Nakano Y (2008) Establishment of rural resource recycling through the effective application of digested slurry from methane fermentation system to paddy and upland fields, Res. Inst. Resour. Circ., Jpn. Soc. Irrig. Drain. Rural Eng. 4:55-70 (in Japanese with English abstract)

Kamioka H and Kamewada K (2011) Effect of anaerobically digested cattle slurry as basal application on paddy rice Koshihikari. Jpn J. Soil Sci. Plant Nutr. 82:31-40

Koga Y, Matsuo M, Terao H, Ogawa T, Hiyoshi K, Kagehigashi S, Kurogi Y and Nishiwaki A (2010) Effects of anaerobically digested slurry to the growth and yield of rice. Bull Fac Agric, Univ Miyazaki. 56:15-27

Mihara M, Hyakutake C, Ijichi T and Mori N (2011) Fertilizer use of digestive fluids from biogas-plant in rice cultivation. Rep. Kyushu Br. Crop Sci. Jpn. 77:15-18

Nakamura M, Yuyama Y, Yamaoka M, Oritate F and Fujikawa T (2012) Method for utilization of methane fermented digested slurry as a liquid fertilizer to minimize negative environmental impacts. Res. Inst. Resour. Circ., Jpn. Soc. Irrig. Drain. Rural Eng. 8:11-30 (in Japanese with English abstract)

Thang NT, Phuong BTM, DangVBH, Nguen PD, Le TKP, Phan DT, Yuyama Y, Oritate F, Mochidzuki K and Sakoda A (2011) Evaluation of the material flows of utilization of husbandry wastes to produce biogas in Thai My Village, Cu Chi District, 8th Biomass-Asia Workshop, Hanoi, Vietnam

Oritate F, Yuyama Y, Nakamura M, Yamaoka M, Nguyen PD, Dang VBH, Mochidzuki K and Sakoda A (2015) Regional diagnosis of biomass use in suburban village in Southern Vietnam. J. Jpn. Inst. Energy 94:805-829

USDA (2010) Keys to soil taxonomy -Eleventh Edition 2010, US Government Printing Office, p 167 (in English)

Vision Tech Inc. (2011) Report of work for creating the database for agricultural facilities

CHAPTER 6

Discussions

6.1 Installation and evaluation of the system to use digested slurry from biogas digesters

Based on the feasibility of use of digested slurry in paddy fields in Southern Vietnam by evaluation from the view point of impact on rice plants and surrounding environment, and the economy as clarified in Chapters 3-5, a scenario to increase biogas digesters in the village for treatment of currently untreated livestock excreta and to use slurry from the biogas digester at agricultural fields as a fertilizer was proposed and designed as the "Scenario 1". The details of the scenario are as follows:

1) All unused pig and milk cow excreta were considered as feedstock for biogas digesters. By increasing the number of biogas digesters, excreta from 10,288 pigs and 61 milk cows became the target.

2) Water content of digested slurry was set to one fifth of the water content of digested slurry in "present conditions" based on consideration of transportation cost of slurry in Chapter 5.

3) Digested slurry produced from biogas digesters was used on non-paddy fields at the same application rate as "present conditions", and all the rest used at paddy fields as fertilizer.

4) Total nitrogen in the digested slurry was considered as replacement for chemical nitrogen fertilizer based on the results of rice cultivation tests using digested slurry at the site.

Based on the above assumed scenario, material flow in a village was calculated as shown in Figure 6-1. Highlighted results are arranged in Tables 6-1, 6-2 and 6-3.

Effluent nitrogen load decreased to 79.7 t y^{-1} from 131.6 t y^{-1}, equivalent to a 39% reduction. The application rate of nitrogen chemical fertilizer for rice cultivation decreased to 2.5 t $year^{-1}$ from 54.4 t y^{-1} as a result of the application of digested slurry. Percolation and leaching were not changed because the former researches in Japan (Kamioka and Kamewada 2011; Sunaga et al.2009; Chen et al. 2013) indicated that the application of digested slurry did not significantly influence on it as mentioned in Chapter 2. Biogas generation rate increased from 52,125 Nm^3 y^{-1} to 326,822 Nm^3 y^{-1}. Nitrogen loss from the paddy field slightly increased through ammonia volatilization caused by application of digested slurry to the surface of the paddy field as mentioned in Appendix 1-1, No.47. Therefore, it is necessary to consider a method of application for digested

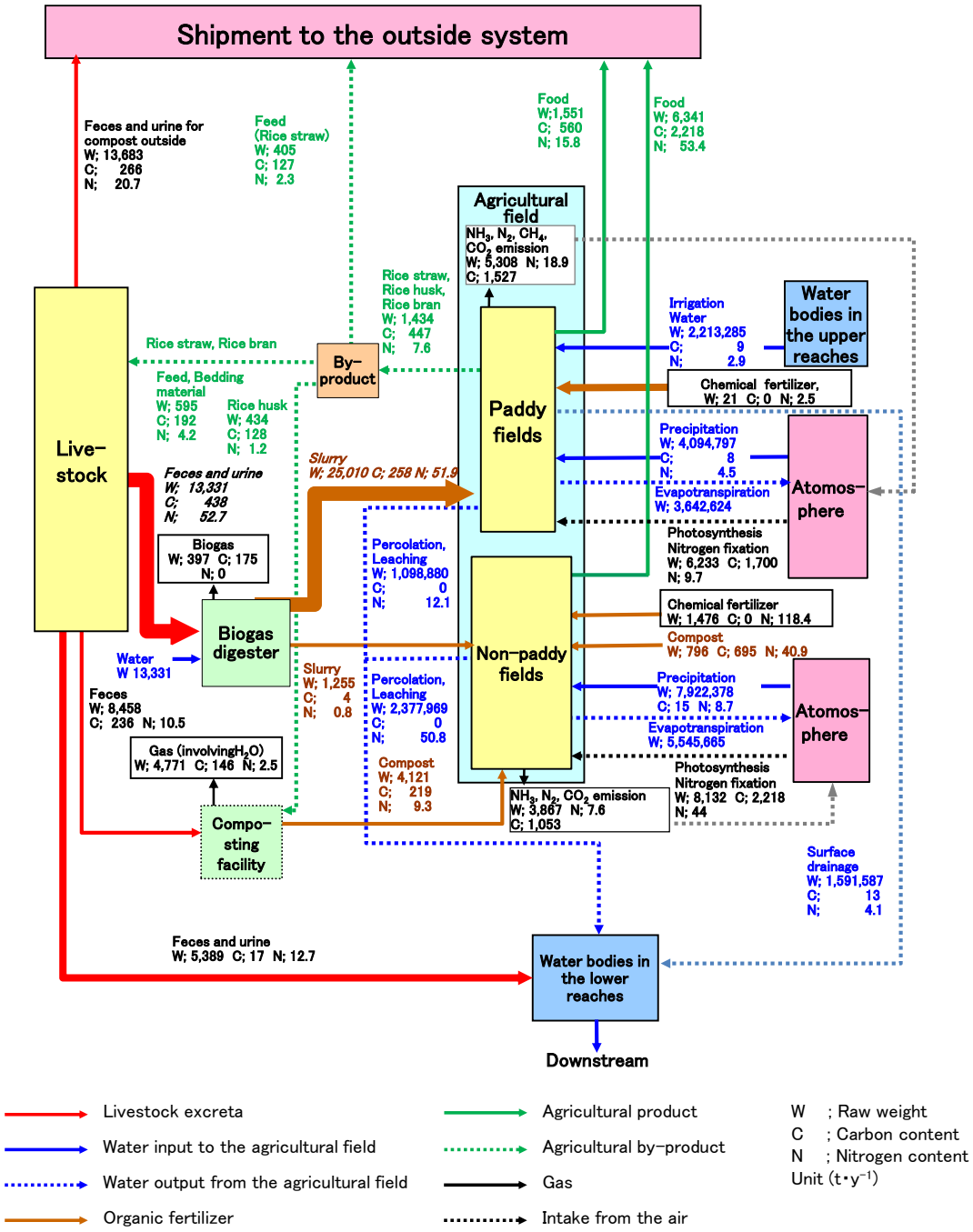

Figure 6-1 "Scenario 1" based on the scenario for increasing biogas digesters and using the slurry from them in paddy fields

slurry that can minimize the ammonia volatilization rate in the future.

Several reports indicate the annual reductions of GHG emission by adoption of household biogas digesters and indicate the annual reduction rate per one unit of biogas digester

Table 6-1 Changes in nitrogen load to lower water bodies from each source

Source of nitrogen load	Present	Scenario 1
	Nitrogen load t year^{-1}	
Livestock excreta	57.0	12.7
Leaching from non-paddy	50.8	50.8
Leaching from paddy fields	12.1	12.1
Surface drainage from paddy	4.1	4.1
Digested slurry	7.6	0.0
Total	131.6	79.7

Table 6-2 Changes in chemical fertilizer use rate in paddy fields

Present		Scenario 1	
Weight	Nitrogen	Weight	Nitrogen
t year^{-1}		t year^{-1}	
457	54.4	21	2.5

Table 6-3 Change in biogas generation rate from biogas digesters

Feedstock of biogas digester	Present	Scenario 1
	Biogas generation rate N m^3 year^{-1}	
Pig excreta	51,394	320,452
Milk cow excreta	731	6,370
Total	52,125	326,822

(UNFCCC 2015). Among them, the reduction rate by adoption of concrete dome-type biogas digesters in rural areas of Vietnam is 2.7054 t-CO_{2e} y^{-1} per one unit of biogas digester (assuming that operation rate of biogas digesters of 100%) (UNFCCC 2012). This rate is derived from the difference in GHG emissions between using coal, LPG and kerosene as cooking fuel and substitution with biogas. Increase of biogas digesters of approximately 586 units from 111 at present to 697 in “Scenario 1” can be estimated. Here, number of the units of biogas digesters are estimated based on popular patterns in Thai My Village, that is, to operate one unit of biogas digester, 15 pigs or 5 milk cows are needed. Therefore, approximately 1,600 t-CO_2 y^{-1} can be

reduced in the whole Thai My village from “present conditions” to “Scenario 1”.

6.2 Advanced regional biomass use system with bio-ethanol production from rice straw

Assuming more improvement of regional biomass use in the future, an advanced scenario can be proposed and designed as “Scenario 2”. In this scenario, a new biomass use system, namely, bio-ethanol production from rice-straw is added to “Scenario 1”. In “Scenario 2”, unused rice straw of 1,618 t y^{-1} which is harvested and left in the field after rice cultivation is focused on as the feedstock for bio-ethanol. According to the results of experimental production of bio-ethanol from rice straw at a pilot plant on the site, 420 kL $year^{-1}$ of bio-ethanol can be produced from 6,000 t y^{-1} of rice straw with a moisture of 60%w.b. (Mochidzuki 2013). Therefore, the conversion unit for bio-ethanol from rice straw can be calculated as 175 L (t-dry rice straw)$^{-1}$. Under this scenario, the material flow in a village was calculated as shown in Figure 6-2. This revealed that approximately 240 kL $year^{-1}$ (≒190 t y^{-1}) of bio-ethanol can be produced as regional energy from unused rice straw. Bio-ethanol could reduce GHG emissions from fossil fuels substituted with bio-ethanol. The calorific value of bio-ethanol from rice straw in “Scenario 2” is estimated at approximately 5.21 TJ y^{-1} according to calorific value of bio-ethanol of 27.40 TJ Gg^{-1} (IPCC 2006a) and its specific gravity of 0.7893 kg L^{-1} (Oki et al. 1994), and by substituting this bio-ethanol for fossil fuel of which GHG emission factor is 69,300 kg-CO_2 TJ^{-1} (IPCC 2006b), 0.36 Gg-CO_2 y^{-1} can be reduced within this village.

6.3 Prospect for diffusion of regional biomass use system to Southeast Asia

This section further evaluated the prospects of the diffusion of the regional biomass use system mentioned above to Southeast Asia. The first scenario considers the use and diffusion of biogas digesters, assuming that manure of all pigs and milk cows is used as feedstock for biogas digesters, and digested slurry is used as fertilizer in agricultural fields. The total numbers of pigs and milk cow throughout Southeast Asia are approximately 72.2 million in 2013 (FAOSTAT 2015a) and 1.66 million (refer to Appendix 3). The total number of biogas digester units throughout Southeast Asia can be estimated at approximately 5.1 million units calculated as for Thai My village. Therefore, the reduction rate of GHG emission throughout Southeast Asia can be estimated at approximately 14 Mt-CO_2eq y^{-1}. This is equal to approximately 3% of the amount of GHG emissions from agricultural sectors in Southeast Asia.

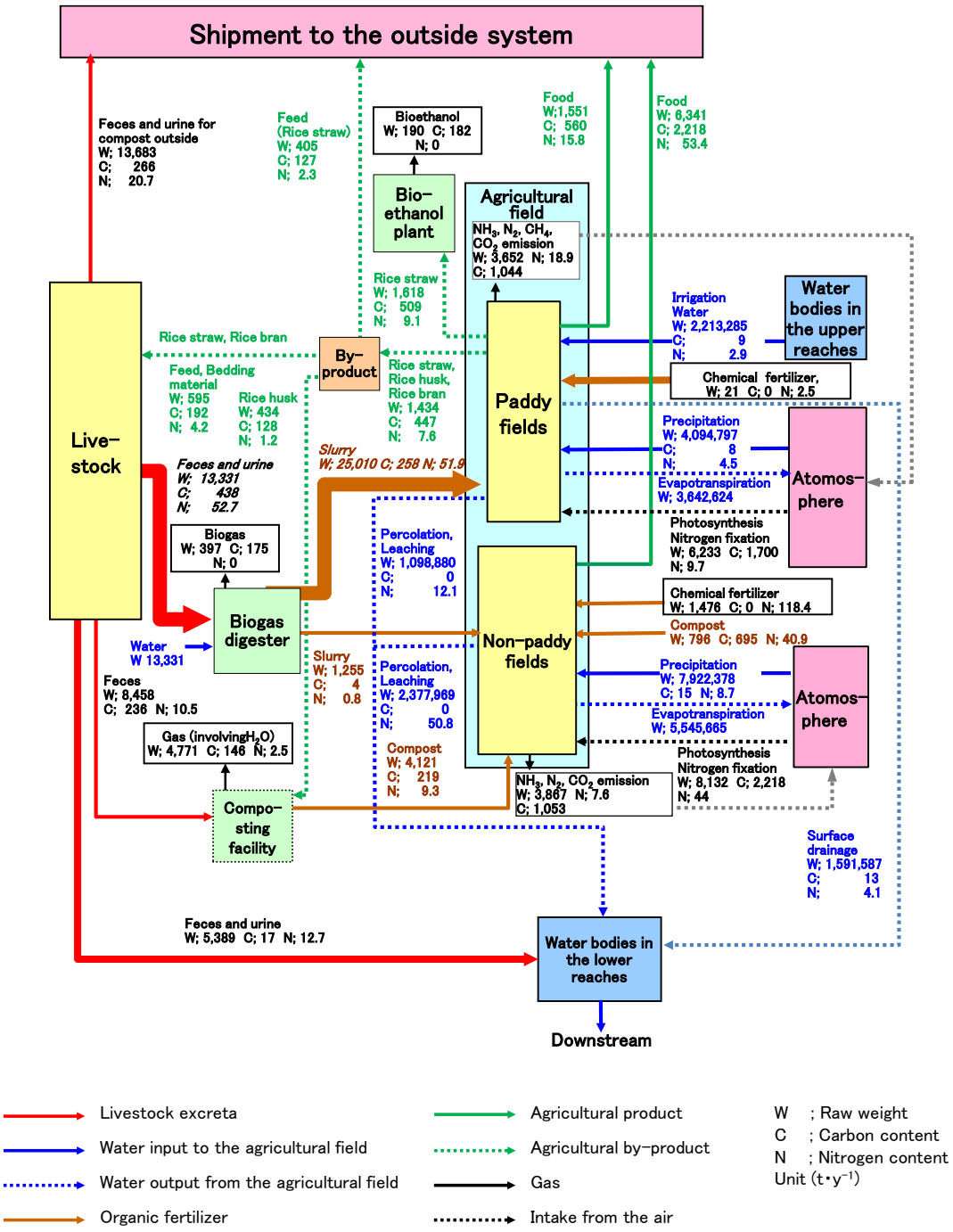

Figure 6-2 "Scenario 2" based on the scenario adding the production of bio-ethanol from rice straw

In the above situation, approximately 0.39 Mt y^{-1} of nitrogen is contained in manure for feedstock for biogas digesters. Therefore, this amount of nitrogen load of digested slurry can be

removed from water bodies by using this digested slurry from biogas digesters in agricultural fields as fertilizer. Total renewable water resources in Southeast Asia is 6,396×10^9 m^3y^{-1} in 2014 (AQUASTAT 2015), so the reduction of nitrogen load corresponds to a decrease of approximately 0.06 mgN L^{-1} in all water discharged in Southeast Asia.

The second scenario considers the production and use of bio-ethanol from unused rice straw assuming that two-thirds of harvested rice straw generated in paddy fields is used for feedstock of bio-ethanol as in "Scenario 2" throughout Southeast Asia. Yield in paddy of Southeast Asia was 4.19 t ha^{-1} in 2013 (FAOSTAT 2015b), and the volume of rice straw that can be used for bio-ethanol production is estimated at 0.16 Gt y^{-1} based on the same calculation as for Thai My Village. In this scenario, approximately 23.7 G L y^{-1} of bio-ethanol can be produced and 350 Mt-CO_2 y^{-1} can be reduced by substituting this bio-ethanol for fossil fuel. This is equal to approximately 8% of the amount of GHG emissions from agricultural sectors in Southeast Asia.

Based on the above discussions, the regional biomass use system proposed above would certainly contribute not only to the local environment, but also to the global environment.

References

AQUASTAT (2015) Total Renewable Water Resources in 2014. In: AQUASTAT Main Database, Food and Agriculture Organization of the United Nations. http://www.fao.org/nr/water/aquastat/data/query/index.html?lang=en. Accessed 26 November 2015

Chen D, Jiang L, Huang H, Toyota K, Dahlgren RA, Lu J (2013) Nitrogen dynamics of anaerobically digested slurry used to fertilize paddy fields. Biol. Fertil. Soils. 49:647-659.

FAOSTAT (2015a) Download data – Production – Live Animals. In: FAOSTAT. Food and Agricultural Organization of the United Nations Statistics Division. http://faostat3.fao.org/download/Q/QA/E. Accessed 26 November 2015

FAOSTAT (2015b) Download data – Production – Crops. In: FAOSTAT. Food and Agricultural Organization of the United Nations Statistics Division. http://faostat3.fao.org/download/Q/QC/E. Accessed 26 November 2015

IPCC (2006a) 2006 IPCC Guidelines for National Greenhouse Gas Inventories, Volume 2 Energy, Chapter 1, p. 1.19, http://www.ipcc-nggip.iges.or.jp/public/2006gl/vol2.html. Accessed 26 November 2015

IPCC (2006b) 2006 IPCC Guidelines for National Greenhouse Gas Inventories, Volume 2 Energy, Chapter 1, p. 1.23, http://www.ipcc-nggip.iges.or.jp/public/2006gl/vol2.html. Accessed 26 November 2015

Kamioka H, Kamewada K (2011) Effect of anaerobically digested cattle slurry as basal application on paddy rice Koshihikari. Jpn. J. Soil Sci. Plant Nutr. 82:31-40.

Mochidzuki K, Biomass town for sustainable local community, Prep. 4th Symposium of JICA-JST Bio-mass Project in Vietnam, 51-63, Dec. 12 2013, Ho Chi Minh City, Vietnam

Oki M, Osawa T, Tanaka M, Chihara H (1994) Chemical dictionary. Tokyo Kagakudojin, Tokyo, Japan p. 165

Sunaga K, Yoshimura N, Hou H, Win KT, Tanaka H, Yoshikawa M, Watanabe H, Motobayashi T, Kato M, Nishimura T, Toyota K, Hosomi M (2009) Impacts of heavy application of anaerobically digested slurry to whole crop rice cultivation in paddy environment on water, air and soil qualities. Jpn. J. Soil Sci. Plant Nutr. 80:596-605.

UNFCCC (2012) Small-scale programme of activities design document 'Vietnam national biogas programme' version 8.1, Reference 5816. United Nations Framework Convention on Climate Change. https://cdm.unfccc.int/filestorage/Y/U/9/YU9OIQDNPBCXAWT035HJR1LVMEK7GF/PoA_DD_Vietnam%20Biogas.pdf?t=MTV8bnlvMnQ0fDB5_I6ALkYoZT-jCSoqpsWH. Accessed 1 December 2015

UNFCCC (2015) Clean Development Mechanism (CDM). United Nations Framework Convention on Climate Change. http://cdm.unfccc.int/. Accessed 26 November 2015

CHAPTER 7

Conclusion

In this study, feasibility of use of digested slurry from biogas digesters in paddy fields in Southern Vietnam was clarified in terms of fertilizer effects on rice, environmental impacts and economical aspect. Following is the summarization of the results obtained. In addition, effects of regional biomass use system to Southeast Asia were forecasted.

In Chapter 3, regional diagnosis of a representative suburban village in Southern Vietnam where rice cultivation and livestock farming are popular was conducted to clarify the present conditions of use of regional biomass. Literature reviews, interviews at the site and field surveys were conducted to collect data for the present regional diagnosis. The analysis of the material flow diagram clarified that untreated livestock excreta and untreated digested slurry occupied 49% in total nitrogen load to regional water bodies, and may cause water pollution, and that of some by-products from rice cultivation, especially, approximately 67% of harvested rice straw is not effectively used even though they may be sources of energy. As the most effective option for this situation, the use of currently untreated livestock excreta as the feedstock for biogas digesters followed by the use of digested slurry in paddy fields in terms of environmental conservation and saving the input of chemical fertilizers to agricultural fields was proposed. Then, the necessity of investigating the feasibility from the view point of 1) effects on rice as a fertilizer and environmental impacts such as nitrogen pollution or fecal contamination of lower water bodies through surface discharge during its use, and 2) economical methods of transporting and applying it, was proposed to promote of the use of digested slurry.

In Chapter 4, to evaluate the feasibility of use of digested slurry in paddy fields of Southern Vietnam from the view point of fertilizer effects on rice, environmental impacts such as nitrogen load and fecal contamination with application of digested slurry, a field experiment on small plots in a paddy field at the site was conducted to compare it with conventional cultivation with chemical fertilizers. Nitrogen concentrations and fecal indicator microbes such as *E. coli* and Coliforms in surface water following fertilization, and yield and yield components were surveyed. As the results, there was no significant difference in yield and yield components between both treatments, nitrogen concentrations in surface water in plots treated with digested slurry decreased gradually but were higher than 10 mg L^{-1} even 1 week after fertilization, and *E coli* in surface water of the plot treated with digested slurry decreased to a non-detectable level within 1 week after fertilization. This clarified that digested slurry is applicable as a fertilizer for rice, and that the

prevention of nitrogen load and fecal contamination in lower water bodies is possible along with the prevention of discharge from the plot treated with slurry for a determined duration.

In Chapter 5, to evaluate the feasibility of use of digested slurry in paddy fields of Southern Vietnam from the view point of economy and labor, a field experiment to test the use of digested slurry by the pouring method was conducted at the site. A vacuum truck was used to transport and pour the digested slurry, and a prototype slurry tanker was also manufactured to transport and apply digested slurry, because vacuum trucks are rarely available in rural areas of Vietnam. To evaluate feasibility, costs and labor for application of digested slurry were examined and compared with conventional cultivation methods using chemical fertilizers. Among the results, costs for slurry fertilization with a prototype slurry tanker and a vacuum truck were estimated at 0.13 USD m^{-2}, and 0.10 USD m^{-2}, respectively. These costs were higher than the 0.06 USD m^{-2} for conventional cultivation with T-N of approximately 400 mg L^{-1} in the digested slurry. However, it was clarified that the cost for slurry fertilization can be lower than that in conventional cultivation when the concentration of nitrogen in the digested slurry is increased from 400 to 2,000 mg L^{-1}. These results clarified that an increase in nitrogen concentrations in digested slurry makes slurry fertilization feasible by decreasing the amount of washing water for livestock sheds that enters into the biogas digesters.

In Chapter 6, according to the results obtained in Chapters 3-5, reduction of 39% of nitrogen load in water bodies and reduction of 1,600 t-CO_2 y^{-1} of GHG emissions were expected by diffusion of biogas digesters and use of digested slurry in a suburban village in Southern Vietnam. Reduction of 0.36 Gg-CO_2 y^{-1} of GHG emission was expected by advanced regional biomass use system with bio-ethanol production from rice straw in the village. The diffusion of biogas digesters and use of digested slurry in paddy fields in Southeast Asia would reduce approximately 0.06 mgN L^{-1} of nitrogen load in the water bodies and approximately 14 Mt-CO_2eq y^{-1} of GHG emission. Diffusion of bio-ethanol production from rice straw would reduce 350 Mt-CO_2 y^{-1} of GHG emissions. The total reduction of 364 Mt-CO_2 y^{-1} of GHG emission corresponds to approximately 11% of the amount of GHG emissions from agricultural sectors.

Vietnam was selected as a representative Southeast Asian country in this study, and regional biomass use systems were developed based on the situation in Vietnam. However, these details differ among countries in the region. Thus, in practice, it will necessary to fine-tune the systems proposed in this study in order to apply them in each Southeast Asian country. In addition, though the systems are based on household biogas digesters, the economies of Southeast Asian Countries are growing rapidly and their livestock sectors will likely grow as well. Therefore, additional consideration of large-scale livestock farming will be necessary in the future.

Appendix 1 Bases of data used for regional diagnosis

Appendix 1-1 Bases of data used for regional diagnosis (paddy field compartment)

Data required	Component	Specific value		Total amount		Process of calculation	Data/information sources	No.
		Value	Unit	Value	Unit			
Paddy field area	—	—	—	217.6	ha	Paddy cropping area in a year is 544 (ha y^{-1})….(1) Half area is 2 (crops y^{-1}), and other half area is 3 (crops y^{-1})….(1) Assumption that same size of area is used for each cultivation season, actual paddy field area is calculated as follows: Paddy field area (ha) = 544 (ha y^{-1})/(1/2 (ha) * 2 (crops) + 1/2 (ha) * 3 (crops)) = 544 (ha y^{-1}) * 2/5 = 217.6 (ha)	(1) Interviews of VPC, DARD	1
(Input) Application of chemical fertilizer	W	840	kg ha^{-1} $crop^{-1}$	457	t y^{-1}	Application rate of chemical fertilizer is 840 (kg ha^{-1} $crop^{-1}$)….(1) Therefore, chemical fertilizer rate (t y^{-1}) = Application rate of chemical fertilizer (kg ha^{-1} $crop^{-1}$) * Cropping area in a year (ha y^{-1})/1000 = 840 (kg ha^{-1} $crop^{-1}$) * 544 (ha y^{-1})/1,000 ≒ 457 (t y^{-1})	(1) Interviews of VPC and Villagers	2
	C	0	kg ha^{-1} $crop^{-1}$	0	t y^{-1}	Carbon is not contained in chemical fertilizer	—	-
	N	100	kg ha^{-1} $crop^{-1}$	54.4	t y^{-1}	Application rate of nitrogen fertilizer is 100 (kg ha^{-1} $crop^{-1}$)….(1) Therefore, application rate of nitrogen fertilizer (t y^{-1}) = Application rate of nitrogen fertilizer (kg ha^{-1} $crop^{-1}$) * Cropping area in a year (ha y^{-1})/1,000 = 100 (kg ha^{-1} $crop^{-1}$) * 544 (ha y^{-1})/1,000 = 54.4 (t y^{-1})	(1) Interviews of VPC and Villagers	3
(Input) Precipitation	W	1881.8	mm y^{-1}	4,094,797	t y^{-1}	Mean annual precipitation is 1,881.8 (mm y^{-1})….(1) Therefore, input from precipitation (t y^{-1}) = Mean annual precipitation (mm y^{-1}) * Area (ha) * 10 = 1,881.8 (mm y^{-1}) * 217.6 (ha) * 10 ≒ 4,094,797 (t y^{-1})	(1) Global Meteorological Information CD edited by Japan Meteorological Business Support Center	4
	C	1.9	mg L^{-1}	8	t y^{-1}	Total carbon concentration of precipitation is 1.9 (mg L^{-1})….(1) Therefore, input from precipitation (t y^{-1}) = Total carbon concentration of precipitation (mg L^{-1}) * Precipitation rate (t y^{-1})/1,000,000 = 1.9 (mg L^{-1}) * 4,094,797 (t y^{-1})/1,000,000 ≒ 8 (t y^{-1})	(1) Hanya T. and Ogura N. (1985) : Water quality investigation method, p. 58, Maruzen	5

(Input) Precipitation	N	1.1	mg L^{-1}	4.5	t y^{-1}	Total nitrogen concentration of precipitation is 1.1 (mg L^{-1})….(1) Therefore, nitrogen content of precipitation (t y^{-1}) = Total nitrogen concentration of precipitation (mg L^{-1}) * Precipitation rate (t y^{-1})/1,000,000 = 1.1 (mg L^{-1}) * 4,094,797 (t y^{-1})/1,000,000 ≒ 4.5 (t y^{-1})	(1) Tabuchi T. and Takamura Y. (1985) : Discharge of nitrogen and phosphorus from watershed, p. 19, University of Tokyo Press	6
(Input) Irrigation water	W	10,286.28	t ha^{-1} y^{-1}	2,238,295	t y^{-1}	Irrigation water for cultivation in dry season (from December to March) was 8,928.52 (t ha^{-1} $crop^{-1}$)….(1) Precipitation in this season was 66 (mm), that is, 660 (t ha^{-1} $crop^{-1}$)….(2) Therefore, necessary water for rice cultivation per crop should be 9588.52 (t ha^{-1} $crop^{-1}$). Precipitation in spring-summer season (from April to August) is 1,128.5 (mm), that is, 11,285 (t ha^{-1} $crop^{-1}$) and precipitation in summer-autumn season (from September to November) is 687.3 (mm), that is, 6,873 (t ha^{-1} $crop^{-1}$)….(2) Therefore, necessary irrigation water for each season is 0 (t ha^{-1} $crop^{-1}$) and 2,715.52 (t ha^{-1} $crop^{-1}$), respectively. 2 crops per year, that is, cultivation in dry season and spring-summer season is conducted in half of paddy field, and 3 crops per year, that is, cultivation in dry season, spring-summer season and summer-autumn season is conducted in half of paddy field.…(3) Therefore, necessary quantity of annual irrigation water (t ha^{-1} y^{-1}) = 1/2 * (8,928.52 + 0) + 1/2 * (8,928.52 + 0 + 2,715.52) = 10,286.28 (t ha^{-1} y^{-1}). Therefore, quantity of irrigation water (t y^{-1}) = 10,286.28 (t ha^{-1} y^{-1}) * 217.6 (ha) ≒ 2,238,295 (t y^{-1})	(1) Field survey at test field (from December 2011 to March 2012) (2) Global Meteorological Information CD edited by Japan Meteorological Business Support Center (3) Interviews of VPC and Villagers	7
(Input) Irrigation water	C	4.0	mg L^{-1}	9	t y^{-1}	Total carbon concentration of irrigation water is approximately 4.0 (mg L^{-1}). …(1) Therefore, carbon content of irrigation water (t y^{-1}) = Quantity of irrigation water (t y^{-1}) * Carbon concentration of irrigation water (mg L^{-1})/1,000,000 = 2,238,295 (t y^{-1}) * 4.0 (mg L^{-1})/1,000,000 ≒ 9 (t y^{-1})	(1) Survey of surface water quality in canal in Thai My Village (from 2010 to 2012)	8

(Input) Irrigation water	N	1.3	mg L^{-1}	2.9	t y^{-1}	Total nitrogen concentration of irrigation water is approximately 1.3 (mg L^{-1}). …(1), (2) Therefore, nitrogen content of irrigation water (t y^{-1}) = Quantity of irrigation water (t y^{-1}) * Nitrogen concentration of irrigation water (mg L^{-1})/1,000,000 = 2,238,295 (t y^{-1}) * 1.3 (mg L^{-1})/1,000,000 ≒ 2.9 (t y^{-1})	(1) Tabuchi T. et al. (1998) : Science for clean water, The Japanese Society of Irrigation, Drainage and Rural Engineering (2) Survey of surface water quality in canal in Thai My Village (from 2010 to 2012)	9
(Input) Photosynthesis	W	—	—	6,233	t y^{-1}	Carbon is taken from the air as carbon dioxide as shown in the following formula for photosynthesis: $6CO_2 + 12H_2O \rightarrow C_6H_{12}O_6 + 6H_2O + 6O_2$ Therefore, photosynthesis rate (t y^{-1}) = 44/12 * Carbon rate taken by photosynthesis (t y^{-1}) = 44/12 * 1,700 (t y^{-1}) ≒ 6,233 (t y^{-1})	Calculation based on the molecular formula for carbon dioxide	10
	C	—	—	1,700	t y^{-1}	Assumption that carbon content taken for photosynthesis is equal to the carbon content of harvest, that is, total carbon content of unhulled rice (Total of polished rice, rice husk and rice bran) and rice straw. Therefore, carbon content taken for photosynthesis (t y^{-1}) = 1,700 (t y^{-1}).	Calculation based on carbon content of harvest (unhulled rice and rice straw) obtained by field survey at test field (from December 2011 to March 2012)	11
	N	0	—	0	t y^{-1}	Nitrogen is not provided by photosynthesis.	—	-
(Input) Nitrogen fixation	W	—	—	10	t y^{-1}	Weight is same as nitrogen.	—	12
	C	0	—	0	t y^{-1}	Carbon is not provided by nitrogen fixation.	—	-
	N	0.0045	t ha^{-1} y^{-1}	9.7	t y^{-1}	Nitrogen fixation rate = 17.8 (kg ha^{-1} $crop^{-1}$)….(1) Therefore, nitrogen fixation rate (t ha^{-1} y^{-1}) = 17.8 (kg ha^{-1} $crop^{-1}$) * ((1/2 * 2 crops + 1/2 * 3 crops)/y)/1000 = 0.0445 (t ha^{-1} y^{-1}). Nitrogen fixation rate (t y^{-1}) = Nitrogen fixation rate (t ha^{-1} y^{-1}) * Area (ha) = 0.0445 (t ha^{-1} y^{-1}) * 217.6 (ha) ≒ 9.7 (t y^{-1})	(1) Giau T. Q. (2012) : Effects of rotational crops and water management on balance of N, P and K and characteristics of acidic alluvium soil, Doctoral Dissertation in Can Tho University, Vietnam	13

(Output) Evapotranspiration	W	150	mm $month^{-1}$	3,642,624	t y^{-1}	Average rate of evaporation at Ho Chi Minh City is 150 mm/month.…(1) The relationship between evapotranspiration and pan evaporation can be written as "evapotranspiration = 0.93 * pan evaporation".…(2) Therefore, evapotranspiration rate (t y^{-1}) = Average of evaporation rate (mm $month^{-1}$) * 12 (month) * 0.93 * Area (ha) * 10 = 150 (mm $month^{-1}$) * 12 (month) * 0.93 * 217.6 (ha) * 10 = 3,642,624 (t y^{-1})	(1) Hieu T. V. (2011) : Assessment of rain water resource in Ho Chi Minh City and proposal of management solutions. Report of DOST-HCMC project. (2) Yoshida S. (1978) : A simple evapotranspiration model of a paddy field in tropical Asia. Soil Science and Plant Nutrition, 25 (1), pp. 81-91	14
(Output) Drainage	W	—	—	1,591,587	t y^{-1}	Assumption that, quantity of drainage water (t ha^{-1} y^{-1}) = (Quantity of irrigation water + Precipitation rate) - (Evapotranspiration rate + Percolation rate) Therefore, quantity of drainage water (t y^{-1}) = (2,238,295 (t y^{-1}) + 4,094,797 (t y^{-1})) - (3,642,624 (t y^{-1}) + 1,098,880 (t y^{-1})) ≒ 1,591,587 (t y^{-1})	Calculation based on quantity of irrigation water, precipitation rate, evapo-transpiration rate and percolation rate.	15
	C	8.0	mg L^{-1}	13	t y^{-1}	Carbon concentration of drainage water is approximately twice as much as irrigation water, that is, 8.0 (mg L^{-1}).…(1) Therefore, carbon content of drainage water (t y^{-1}) = Quantity of drainage water (t y^{-1}) * Total carbon concentration of drainage water (mg L^{-1})/1,000,000 = 1,591,587 (t y^{-1}) * 8.0 (mg L^{-1})/1,000,000 ≒ 13 (t y^{-1})	(1) Assumption based on the results of survey of surface water quality in canal in Thai My Village (from 2010 to 2012)	16
	N	2.6	mg L^{-1}	4.1	t y^{-1}	Nitrogen concentration of drainage water is approximately twice as much as irrigation water, that is, 2.6 (mg L^{-1}).…(1) Therefore, nitrogen content of drainage water (t y^{-1}) = Quantity of drainage water (t y^{-1}) * Total nitrogen concentration of drainage water (mg L^{-1})/1,000,000 = 1,591,587 (t y^{-1}) * 2.6 (mg L^{-1})/1,000,000 ≒ 4.1 (t y^{-1})	(1) Assumption based on the results of survey of surface water quality in canal in Thai My Village (from 2010 to 2012)	17
(Output) Denitrification	W	—	—	16	t y^{-1}	Weight is same as nitrogen.	—	18
	C	0	—	0	t y^{-1}	Carbon is not lost by denitrification.	—	-

(Output) Denitrification	N	30	%	16.3	t y^{-1}	Denitrification rate is 20-50% of nitrogen fertilization rate….(1) Therefore, assumption the value is 30%. Therefore, denitrification rate (t y^{-1}) = Nitrogen content of fertilizer (kg ha^{-1} $crop^{-1}$) * Cropping area in a year (ha y^{-1}) * 0.3/1,000 = 100 (kg ha^{-1} $crop^{-1}$) * 544 (ha y^{-1}) * 0.3/1,000 ≒ 16.3 (t y^{-1})	(1) Kyuma K. (2004) : Paddy soil science. Kyoto University Press, p. 151	19
(Output) Ammonia volatilization	W	—	—	1	t y^{-1}	Weight is same as ammonia volatilization rate.	—	20
	C	0	—	0	t y^{-1}	Carbon is not lost by ammonia volatilization.	—	-
	N	1.7	%	0.9	t y^{-1}	Nitrogen loss by ammonia volatilization is 1.7% of nitrogen fertilization rate per crop at paddy field with the pH range between 3.4 and 6.2.…(1) Therefore, nitrogen loss by ammonia volatilization (t y^{-1}) = Nitrogen fertilization rate (kg ha^{-1} $crop^{-1}$) * Cropping area in a year (ha y^{-1}) * 0.017/1,000 = 100 (kg ha^{-1} $crop^{-1}$) * 544 (ha y^{-1}) * 0.017/1,000 ≒ 0.9 (t y^{-1})	(1) Watanabe T. (2009) : Measurement of ammonia volatilization from flooded paddy fields in Vietnam. Soil Science and Plant Nutrition, 55, pp. 793-799	21
(Output) Percolation	W	202	mm $crop^{-1}$	1,098,880	t y^{-1}	1) Percolation rate is 202 (mm $crop^{-1}$).…(1) Therefore, percolation rate (t y^{-1}) = Percolation rate (mm ha^{-1} $crop^{-1}$) * 0.01 * Cropping area in a year (ha y^{-1}) * 1,000 = 202 (mm ha^{-1} $crop^{-1}$) * 0.01 * 544 (ha y^{-1}) * 1,000 = 1,098,880 (t y^{-1})	(1) Thoai N. L. Q et al. (2012) : Balance of water, nitrogen and phosphorus for rice crop at a paddy field in Southern Vietnam, Proceedings of Annual Conference for Society of Environmental Science 2012, Japan, pp. 136-137	22
	C	0	kg ha^{-1} $crop^{-1}$	0	t y^{-1}	Carbon loss by percolation is assumed to be 0.	—	-
	N	11	mg L^{-1}	12.1	t y^{-1}	Nitrogen concentration of water 30-50 cm from the ground surface in the experimental field was approximately 11 (mg L^{-1}).…(1) Percolation rate is 1,098,880 (t y^{-1}). Therefore, loss by nitrate leaching (t y^{-1}) = Percolation rate (t y^{-1}) * Nitrogen concentration in water (mg L^{-1})/1,000,000 = 1,098,880 (t y^{-1}) * 11 (mg L^{-1})/1,000,000 ≒ 12.1 (t y^{-1})	(1) Field survey at test field (from December 2013 to March 2014)	23

(Output) Methane gas emission	W	160	kg ha^{-1} y^{-1}	87	t y^{-1}	1) Methane gas emitted during cultivation of rice at intermittently flooded paddy field is approximately 16 g m^{-2} y^{-1}…(1) = 160 kg ha^{-1} y^{-1} Methane gas emission rate is 160 kg ha^{-1} y^{-1} in the reference. The rate is converted to 160 kg ha^{-1} $crop^{-1}$ for application rate to the objective village. Therefore, methane gas emission rate (t y^{-1}) = Methane gas emission rate (kg ha^{-1} $crop^{-1}$) * Cropping area in a year (ha y^{-1})/1,000 = 160 (kg ha^{-1} $crop^{-1}$) * 544 (ha y^{-1})/1,000 ≒ 87 (t y^{-1})	(1) Ministry of Environment, Japan Greenhouse Gas Inventory Office of Japan (GIO), CGER, NIES (2011) : National Greenhouse Gas Inventory Report of Japan, p. 6-25	24
	C	—	—	65	t y^{-1}	Carbon content in methane gas (t y^{-1}) = Methane gas emission rate (t y^{-1}) * 12/16 = 87 * 12/16 ≒ 65 (t y^{-1})	Calculation based on the molecular formula of methane	25
	N	0	kg ha^{-1}	0	t y^{-1}	Nitrogen is not lost by methane gas emission.	—	-
(Output) Carbon dioxide emission	W	—	—	2,952	t y^{-1}	Carbon dioxide emission rate (t y^{-1}) = 44/12 * Carbon loss rate in the form of carbon dioxide (t y^{-1}) ≒ 2,952 (t y^{-1})	Calculation based on the molecular formula of carbon dioxide	26
	C	870	t y^{-1}	805	t y^{-1}	Total carbon loss from paddy field is 4,000 (kgC ha^{-1} y^{-1})…(1). Therefore, total carbon loss from paddy field (t y^{-1}) = 4,000 (kg ha^{-1} y^{-1}) * 217.6 (ha)/1000 ≒ 870 (t y^{-1}). Assumption that carbon loss from the paddy field is in the form of methane and carbon dioxide. Therefore, carbon loss in the form of carbon dioxide (t y^{-1}) = Total carbon loss rate (t y^{-1}) - Carbon loss rate in the form of methane (t y^{-1}) = 870 (t y^{-1}) - 65 (t y^{-1}) = 805 (t y^{-1}).	(1) Systemization Sub-team, Bio-Recycle Project ed. (2006) : Design and Evaluation of Biomass Use System, p. 33	27
	N	0	t y^{-1}	0	t y^{-1}	Nitrogen is not lost by carbon dioxide emissions.	—	-
(Output) Yield of polished rice (normal)	W	0.6161	—	1,341	t y^{-1}	Average yield of unhulled rice is 4 (t ha^{-1} $crop^{-1}$) with a water content of 15%. …(1),(2) Generation rate of polished rice (normal) to yield of unhulled rice is 0.6161 with a water content of 15%.…(1) Therefore, the amount of polished rice (normal) with the water content of 15% (t y^{-1}) = Yield of unhulled rice with a water content of 15% (t ha^{-1} $crop^{-1}$) * Cropping area in a year (ha y^{-1}) * Generation rate = 4 (t ha^{-1} $crop^{-1}$) * 544 (ha y^{-1}) * 0.6161 ≒ 1,341 (t y^{-1})	(1) Field survey at test field (from December 2011 to March 2012, from May to August 2012) (2) Interviews of VPC and Villagers	28

(Output) Yield of polished rice (normal)	C	42.5	%	484	t y^{-1}	Carbon concentration of polished rice under dry conditions is about 42.5 (%). …(1) Therefore, carbon content of polished rice (normal) = Amount of polished rice (normal) with a water content of 15% (t y^{-1}) * (1-water content (%)) * Carbon concentration of polished rice under dry conditions (%) = 1,341 (t y^{-1}) * (1-15/100) * 42.5/100 ≒ 484 (t y^{-1})	(1) Field survey at test field (from May to August 2012, from December 2013 to March 2014)	29
	N	1.2	%	13.7	t y^{-1}	Nitrogen concentration of polished rice under dry conditions is 1.2 (%).…(1) Therefore, nitrogen content of polished rice (normal) = Amount of polished rice (normal) with the water content of 15% (t y^{-1}) * (1-water content (%)) * Nitrogen concentration of polished rice (normal) under dry conditions (%) = 1,341 (t y^{-1}) * (1-15/100) * 1.2/100 ≒ 13.7 (t y^{-1})	(1) Field survey at test field (from May to August 2012, December 2013 to March 2014)	30
(Output) Yield of polished rice (broken)	W	0.0967	—	210	t y^{-1}	Generation rate of polished rice (broken) to yield of unhulled rice is 0.0967 with a water content of 15%.…(1) Therefore, the amount of polished rice (broken) with a water content of 15% (t y^{-1}) = Yield (t ha^{-1} $crop^{-1}$) * Cropping area in a year (ha y^{-1}) * Generation rate = 4 (t ha^{-1} $crop^{-1}$) * 544 (ha y^{-1}) * 0.0967 ≒ 210 (t y^{-1})	(1) Field survey at test field (from December 2011 to March 2012, from May to August 2012)	31
	C	42.5	%	76	t y^{-1}	Carbon concentration of polished rice under dry conditions is 42.5 (%).…(1) Therefore, carbon content of polished rice (broken) = Amount of polished rice (broken) with a water content of 15% (t y^{-1}) * (1-water content (%)) * Carbon concentration of polished rice (broken) under dry conditions (%) = 210 (t y^{-1}) * (1-15/100) * 42.5/100 ≒ 76 (t y^{-1})	(1) Field survey at test field (from May to August 2012, from December 2013 to March 2014)	32
	N	1.2	%	2.1	t y^{-1}	Nitrogen concentration of polished rice under dry conditions is 1.2 (%).…(1) Therefore, nitrogen content of polished rice (broken) = Amount of polished rice (broken) with a water content of 15% (t y^{-1}) * (1-water content (%)) * Nitrogen concentration of polished rice (broken) under dry conditions (%) = 210 (t y^{-1}) * (1-15/100) * 1.2/100 ≒ 2.1 (t y^{-1})	(1) Field survey at test field (from May to August 2012, from December 2013 to March 2014)	33

(Output) Yield of rice husk	W	0.1995	—	434	t y^{-1}	Generation rate of rice husk to yield of unhulled rice is 0.1995 with a water content of 15%.…(1) Therefore, the amount of rice husk with a water content of 15% (t y^{-1}) = Yield (t ha^{-1} $crop^{-1}$) * Cropping area in a year (ha y^{-1}) * Generation rate = 4 (t ha^{-1} $crop^{-1}$) * 544 (ha y^{-1}) * 0.1995 ≒ 434 (t y^{-1})	(1) Field survey at test field (from December 2011 to March 2012, from May to August 2012)	34
	C	34.6	%	128	t y^{-1}	Carbon concentration of rice husk under dry conditions is 34.6 (%).…(1) Therefore, carbon content of rice husk (t y^{-1}) = Amount of rice husk with the water content of 15% (t y^{-1}) * (1-water content (%)) * Carbon concentration of rice husk with dry conditions (%) = 434 (t y^{-1}) * (1-15/100) * 34.6/100 ≒ 128 (t y^{-1})	(1) Nakamura M. et al. (2005) : Development of a composition database for various types of biomass, Technical Report of the National Institute for Rural Engineering, p. 69	35
	N	0.32	%	1.2	t y^{-1}	Nitrogen concentration of rice husk is 0.32 (%)…(1). Therefore, nitrogen content of rice husk (t y^{-1}) = Amount of rice husk with a water content of 15% (t y^{-1}) * (1-water content (%)) * Nitrogen concentration of rice husk with dry conditions (%) = 434 (t y^{-1}) * (1-15/100) * 0.32/100 ≒ 1.2 (t y^{-1})	(1) Nakamura M. et al. (2005) : Development of a composition database for various types of biomass, Technical Report of the National Institute for Rural Engineering, p. 69	36
(Output) Yield of rice bran	W	0.0877	—	191	t y^{-1}	Generation rate of rice bran to yield of unhulled rice with a water content of 15% is 0.0877…(1). Therefore, the amount of rice bran with a water content of 15% (t y^{-1}) = Yield with a water content of 15% (t ha^{-1} $crop^{-1}$) * Cropping area in a year (ha y^{-1}) * Generation rate = 4 (t ha^{-1} $crop^{-1}$) * 544 (ha y^{-1}) * 0.0877 ≒ 191 (t y^{-1})	(1) Field survey at test field (from December 2011 to March 2012, from May to August 2012)	37
	C	40.2	%	65	t y^{-1}	Carbon concentration of rice bran under dry conditions is 40.2 (%).…(1) Therefore, carbon content of rice bran = Amount of rice bran with the water content of 15% (t y^{-1}) * (1-water content (%)) * Carbon concentration of rice bran with dry conditions (%) = 191 (t y^{-1}) * (1-15/100) * 40.2/100 ≒ 65 (t y^{-1})	(1) Nakamura M. et al. (2005) : Development of a composition database for various types of biomass, Technical Report of the National Institute for Rural Engineering, p. 69	38
	N	1.18	%	1.9	t y^{-1}	Nitrogen concentration of rice bran under dry conditions is 1.18 (%).…(1) Therefore, nitrogen content of rice bran = Amount of rice bran with the water content of 15% (t y^{-1}) * (1-water content (%)) * Nitrogen concentration of rice bran with dry conditions (%) = 191 (t y^{-1}) * (1-15/100) * 1.18/100 ≒ 1.9 (t y^{-1})	1) Nakamura M. et al. (2005) : Development of a composition database for various types of biomass, Technical Report of the National Institute for Rural Engineering, p. 69	39

(Output) Yield of rice straw (Upper part above dividing point at harvesting)	W	1.1154	—	2,427	t y^{-1}	Generation rate of upper part above dividing point by combine or hook at harvesting of rice straw to yield of unhulled rice is 1.1154….(1),(2) Therefore, the amount of rice straw (upper part) (t y^{-1}) = Yield (t ha^{-1} $crop^{-1}$) * Cropping area in a year (ha y^{-1}) * Generation rate = 4 (t ha^{-1} $crop^{-1}$) * 544 (ha y^{-1}) * 1.1154 ≒ 2,427 (t y^{-1})	(1) Field survey at test field (from December 2011 to March 2012, from May to August 2012) (2) Interviews of Villagers	40
	C	37.01	%	764	t y^{-1}	Carbon concentration of rice straw under dry conditions is 37.01 (%)….(1) Therefore, carbon content of rice straw (upper part) = Amount of rice straw (upper part) with a water content of 15% (t y^{-1}) * (1-water content (%)) * Carbon concentration of rice straw under dry conditions (%) = 2,427 (t y^{-1}) * (1-15/100) * 37.01/100 ≒ 764 (t y^{-1})	(1) Field survey at test field (from December 2011 to March 2012, from May to August 2012)	41
	N	0.66	%	13.6	t y^{-1}	Nitrogen concentration of rice straw under dry conditions is 0.66 (%)….(1) Therefore, nitrogen content of rice straw (upper part) = Amount of rice straw (upper part) (t y^{-1}) * (1-water content (%)) * Nitrogen concentration of rice straw under dry conditions (%) = 2,427 (t y^{-1}) * (1-15/100) * 0.66/100 ≒ 13.6 (t y^{-1})	(1) Field survey at test field (from December 2011 to March 2012, from May to August 2012)	42
(Output) Yield of rice straw (Lower part below dividing point at harvesting)	W	0.2676	—	582	t y^{-1}	Generation rate of lower part below dividing point by combine or hook of rice straw to yield of unhulled rice is 0.2676….(1),(2) Therefore, the amount of rice straw (lower part) (t y^{-1}) = Yield (t ha^{-1} $crop^{-1}$) * Cropping area in a year (ha y^{-1}) * Generation rate = 4 (t ha^{-1} $crop^{-1}$) * 544 (ha y^{-1}) * 0.2676 ≒ 582 (t y^{-1})	(1) Field survey at test field (from December 2011 to March 2012, from May to August 2012) (2) Interviews of Villagers	43
	C	37.01	%	183	t y^{-1}	Carbon concentration of rice straw under dry conditions is 37.01 (%)….(1) Therefore, carbon content of rice straw (lower part) = Amount of rice straw (lower part) (t y^{-1}) * (1-water content (%)) * Carbon concentration of rice straw under dry conditions (%) = 582 (t y^{-1}) * (1-15/100) * 37.01/100 ≒ 183 (t y^{-1})	(1) Field survey at test field (from December 2011 to March 2012, from May to August 2012)	44
	N	0.66	%	3.3	t y^{-1}	Nitrogen concentration of rice straw under dry conditions is 0.66 (%)….(1) Therefore, nitrogen content of rice straw = Amount of rice straw (lower part) (t y^{-1}) * (1-water content (%)) * Nitrogen concentration of rice straw under dry conditions (%) = 582 (t y^{-1}) * (1-15/100) * 0.66/100 ≒ 3.3 (t y^{-1})	(1) Field survey at test field (from December 2011 to March 2012, from May to August 2012)	45

	W	—	—	3	t y^{-1}	Weight is same as ammonia vitalization rate.	—	46
	C	0	—	0	t y^{-1}	Carbon is not lost by ammonia volatilization.	—	-
(Output) Ammonia volatilization (With use of slurry)	N	4.86	%	2.6	t y^{-1}	Nitrogen loss by ammonia volatilization is 1.7% of nitrogen fertilization rate per crop at paddy field with the pH range between 3.4 and 6.2.…(1) By laboratory test on application of chemical fertilizer and slurry to soil in experimental paddy field (pH 3.5-4.0), the ammonia volatilization rate in the application of slurry was 2.857 times greater than in chemical fertilizer.…(2) Therefore, nitrogen loss by ammonia volatilization (t y^{-1}) = Nitrogen content of fertilizer (kg ha^{-1} $crop^{-1}$) * Cropping area in a year (ha y^{-1}) * 0.017/1,000 * 2.857 = 100 (kg ha^{-1} $crop^{-1}$) * 544 (ha y^{-1}) * 0.017/1,000 * 2.857 ≒ 2.6 (t y^{-1})	(1) Watanabe T. (2009) : Measurement of ammonia volatilization from flooded paddy fields in Vietnam. Soil Science and Plant Nutrition, 55, pp. 793-799 (2) Laboratory-test	47
(Output) Gas emission in burning unused rice straw after harvesting (Without use of rice straw for bio-ethanol)	W	—	—	2,250	t y^{-1}	Rice straw burned after cultivation is the total of all lower part below dividing point, and 4/6 of upper part above dividing point by combine or hook.…(1) Therefore, the amount of burned rice straw (t y^{-1}) = 582 (t y^{-1}) + 4/6 * 2,427 (t y^{-1}) = 2,200 (t y^{-1}) The contribution to the gaseous C released to the atmosphere is 84% for CO_2, 14% for CO and 1.2% for CH_4.…(2) Total carbon loss is 657 (t y^{-1}) as below calculation for carbon rate. Therefore, carbon loss by CO_2 (t y^{-1}) = 657 (t y^{-1}) * 0.84 ≒ 552 (t y^{-1}) Carbon loss by CO (t y^{-1}) = 657 (t y^{-1}) * 0.14 ≒ 92 (t y^{-1}) Carbon loss by CH4 (t y^{-1}) = 657 (t y^{-1}) * 0.012 ≒ 8 (t y-1) Therefore, the weight of gas released in burning the rice straw (t y^{-1}) = Total of loss in the form of CO_2, CO and CH_4 = 552 (t y^{-1}) * 44/12 + 92 (t y^{-1}) * 28/12 + 8 * 16/12 ≒ 2,250 (t y^{-1})	(1) Field survey at test field (from December 2011 to March 2012, from May to August 2012) (2) Nguyen B. C. et al. (1994) : CH_4 and CO emissions from rice straw burning in south east Asia, Environmental Monitoring and Assessment 31, pp. 131-137	48

(Output) Gas emission in burning unused rice straw after harvesting (Without use of rice straw for bio-ethanol)	C	37.01	%	657	t y^{-1}	Carbon concentration of rice straw under dry conditions is 37.01 (%)….(1) Therefore, carbon content of 2,200 (t y^{-1}) of rice straw (t y^{-1}) = Amount of rice straw with a water content of 15% (t y^{-1}) * (1-water content (%)) * Carbon concentration of rice straw under dry conditions (%) = 2,200 (t y^{-1}) * (1-15/100) * 37.01/100 ≒ 692 (t y^{-1}) 3) About 95% of the carbon burned is released in the atmosphere in the gaseous form.…(2) 4) Therefore, carbon loss rate by burning of rice straw (t y^{-1}) = 692 (t y^{-1}) * 0.95 ≒ 657 (t y^{-1})	(1) Field survey at test field (from December 2011 to March 2012, from May to August 2012) (2) Nguyen B. C. et al. (1994) : CH4 and CO emissions from rice straw burning in south east Asia, Environmental Monitoring and Assessment 31, pp. 131-137	49
	N	—	—	0	t y^{-1}	Nitrogen is not lost.	—	-
(Output) Gas emission in burning unused rice straw after harvesting (With use of rice straw for bio-ethanol)	W	—	—	594	t y^{-1}	Rice straw burned after cultivation is the total of all lower part below dividing point. Therefore, the amount of burned rice straw (t y^{-1}) = 582 (t y^{-1})….(1) The contribution to the gaseous C released to the atmosphere is 84% for CO_2, 14% for CO and 1.2% for CH_4….(2) Total carbon loss is 174 (t y^{-1}) as below calculation about carbon rate. Therefore, carbon loss by CO_2 (t y^{-1}), CO (t y^{-1}) and CH_4 (t y^{-1}) ≒ 146 (t y^{-1}), 24 (t y^{-1}) and 2 (t y^{-1}) Therefore, the weight of gas released in burning the rice straw (t y^{-1}) = Total of loss in the form of CO_2, CO and CH_4 = 146 (t y^{-1}) * 44/12 + 24 (t y^{-1}) * 28/12 + 2 * 16/12 = 594 (t y^{-1})	(1) Field survey at test field (from December 2011 to March 2012, from May to August 2012) (2) Nguyen B. C. et al. (1994) : CH_4 and CO emissions from rice straw burning in south east Asia, Environmental Monitoring and Assessment 31, pp. 131-137	50
	C	37.01	%	174	t y^{-1}	Carbon concentration of rice straw under dry conditions is 37.01 (%)….(1) Therefore, carbon content of 582 (t y^{-1}) of rice straw (t y^{-1}) = Amount of rice straw with a water content of 15% (t y^{-1}) * (1-water content (%)) * Carbon concentration of rice straw under dry conditions (%) = 582 (t y^{-1}) * (1-15/100) * 37.01/100 ≒ 183 (t y^{-1}) About 95% of the carbon burned is released in the atmosphere in the gaseous form.…(2) Therefore, carbon loss rate by burning of rice straw (t y^{-1}) = 183 (t y^{-1}) * 0.95 ≒ 174 (t y^{-1})	(1) Field survey at test field (from December 2011 to March 2012, from May to August 2012) (2) Nguyen B. C. et al. (1994) : CH_4 and CO emissions from rice straw burning in south east Asia, Environmental Monitoring and Assessment 31, pp. 131-137	51
	N	—	—	0	t y^{-1}	Nitrogen is not lost.	—	-

Appendix 1-2 Bases of data used for regional diagnosis (non-paddy field compartment)

Data required	Component	Specific value		Total amount		Process of calculation	Data/information sources	No.
		Value	Unit	Value	Unit			
Total area	—	—	—	421	ha	—	Interviews of VPC, DARD	1
Corn cultivation area	—	—	—	200	ha	—	Interviews of VPC, DARD	2
(Input) Application of chemical fertilizer for corn	W	3,500	kg ha^{-1} y^{-1}	700	t y^{-1}	Chemical fertilization rate is 10 times nitrogen fertilization rate.	Rough assumption	3
	C	0	kg ha^{-1} y^{-1}	0	t y^{-1}	Carbon is not contained in chemical fertilizer.	—	-
	N	350	kg ha^{-1} y^{-1}	70.0	t y^{-1}	Fertilization standard for corn in Okinawa Prefecture is referred to here because standard for corn in Vietnam is not clear. Fertilization with chemical fertilizer is "N : P_2O_5 : K_2O = 35 : 19 : 20 (Unit: kg $10a^{-1}$ y^{-1})"….(1) Therefore, nitrogen fertilization rate with chemical fertilizer (t y^{-1}) = 350 (kg ha^{-1} y^{-1}) * 200 (ha)/1,000 = 70.0 (t y^{-1})	(1) Guideline for vegetable cultivation in Okinawa Prefecture (2006) : Department of Agriculture, Forestry and Fisheries, Okinawa Prefecture, p. 7	4
(Input) Application of compost for corn	W	25	t ha^{-1} y^{-1}	5,000	t y^{-1}	Compost is used for cultivation of corn.…(1) Fertilization standard for corn in Okinawa Prefecture is referred to here because standard for corn in Vietnam is not clear. Fertilization with compost is 2,500 kg $10a^{-1}$ y^{-1}….(2) Therefore, application rate of compost (t y^{-1}) = Fertilization rate with compost (t ha^{-1} y^{-1}) * Area (ha) = 25 (t ha^{-1} y^{-1}) * 200 (ha) = 5,000 (t y^{-1}) * In case of using digested slurry as fertilizer, application rate of compost would be decreased.	(1) Interviews of Villagers (2) Guideline for vegetable cultivation in Okinawa Prefecture (2006) : Department of Agriculture, Forestry and Fisheries, Okinawa Prefecture, p. 7	5
	C	18.36	%	918	t y^{-1}	Ratio of carbon to nitrogen is 18, and nitrogen concentration is 1.02 (%).…(1) Therefore, carbon concentration in dry compost is 18.36 (%). Therefore, application rate (t y^{-1}) = Application rate (t y^{-1}) * Carbon concentration of compost (%) = 5,000 (t y^{-1}) * 18.36/100 = 918 (t y^{-1}) * In case of using digested slurry as fertilizer, the application rate of compost would be decreased.	(1) Kin Organic Compost Center Industry Ltd. http://kin-taihi.jp/product.html	6
	N	1.02	%	51.0	t y^{-1}	Nitrogen concentration in compost is 1.02 (%).…(1) Therefore, application rate of nitrogen with compost (t y^{-1}) = Application rate of compost (t y^{-1}) * Nitrogen concentration of compost (%) = 5,000 (t y^{-1}) * 1.02/100 = 51.0 (t y^{-1}) * In case of using digested slurry as fertilizer, the application rate of compost would be decreased.	Kin Organic Compost Center Industry Ltd. http://kin-taihi.jp/product.html	7

Vegetable cultivation area	—	—	—	75	ha	—	Interviews of VPC, DARD	8
(Input) Application of chemical fertilizer for vegetables (sugar cane)	W	2,560	kg ha^{-1} y^{-1}	192	t y^{-1}	Chemical fertilization rate is 10 times nitrogen fertilization rate.	Rough assumption	9
	C	0	kg ha^{-1} y^{-1}	0	t y^{-1}	Carbon is not contained in chemical fertilizer.	—	-
	N	256	kg ha^{-1} y^{-1}	19.2	t y^{-1}	Vegetable variety cultivated at Thai My Village is not clear because vegetable variety is decided according to the price year by year….(1) Sugar cane is one of the main vegetables cultivated in Vietnam…(2) and also in Thai My Village…(1), so assumption is sugar cane as main vegetable here. Fertilization standard for sugar cane in Okinawa Prefecture is referred here because standard for sugar cane in Vietnam is not clear. Fertilization by chemical fertilizer is "N : P_2O_5 : K_2O = 25.6 : 23.2 : 10.9 (Unit: kg $10a^{-1}$ y^{-1}) on average"….(3) Therefore, nitrogen fertilization rate with chemical fertilizer (t y^{-1}) = 25.6 (kg $10a^{-1}$ y^{-1}) * 10 * Area (ha)/1,000 = 19.2 (t y^{-1})	(1) Interviews of VPC and Villagers (2) Statistical Year Book 2011 (2011) : General Statistical Office in Vietnam, pp. 322-324 (3) Guideline for sugar cane cultivation (2006) : Department of Agriculture, Forestry and Fisheries, Okinawa Prefecture	10
Fruit cultivation area	—	—	—	146	ha	—	Interviews of VPC, DARD	11
(Input) Application of chemical fertilizer for fruit (mango)	W	4,000	kg ha^{-1} y^{-1}	584	t y^{-1}	Fruit variety cultivated at Thai My Village is not clear because decided according to the price year by year….(1) Mango is one of the main fruits cultivated in Vietnam…(2) and also in Thai My Village…(1), so assumption is mango as the main fruit here. Fertilization standard for mango (five years after starting cultivation) in Okinawa Prefecture is used here because standard for mango in Vietnam is not clear. Fertilization by chemical fertilizer is total fertilization rate in a year of 400 (kg $10a^{-1}$)….(3) Therefore, chemical fertilization rate (t y^{-1}) = Fertilization rate (kg ha^{-1} y^{-1}) * 10 * Area (ha)/1,000 = 4,000 (kg ha^{-1} y^{-1}) * 146 (ha)/1,000 = 584 (t y^{-1})	(1) Interviews of VPC and Villagers (2) Statistical Year Book 2011 (2011) : General Statistical Office in Vietnam, pp. 372-374 (3) Guideline for fruits cultivation, (2003) : Department of Agriculture, Forestry and Fisheries, Okinawa Prefecture, p. 10	12
	C	0	kg ha^{-1} y^{-1}	0	t y^{-1}	Carbon is not contained in chemical fertilizer.	—	-
	N	200	kg ha^{-1} y^{-1}	29.2	t y^{-1}	Fertilization standard for mango (five years after starting cultivation) in Okinawa Prefecture is used here because standard for mango in Vietnam is not clear. Nitrogen fertilization rate shown in above standard is 20 (kg $10a^{-1}$) in a year. …(1) Therefore, nitrogen fertilization rate of chemical fertilizer (t y^{-1}) = Nitrogen fertilization rate (kg ha^{-1} y^{-1}) * Area (ha)/1,000 = 200 (kg ha^{-1} y^{-1}) * 146 (ha)/1,000 ≒ 29.2 (t y^{-1})	(1) Guideline for fruits cultivation, (2003) : Department of Agriculture, Forestry and Fisheries, Okinawa Prefecture, p. 10	13

(Output) Yield of corn	W	7.5	t ha^{-1} y^{-1}	1,500	t y^{-1}	Yield of corn per crop is 6-9 (t ha^{-1})….(1), so, the average is 7.5 (t ha^{-1} $crop^{-1}$). Corn is cultivated once a year, so, 7.5 (t ha^{-1} $crop^{-1}$) = 7.5 (t ha^{-1} y^{-1}). Therefore, yield (t y^{-1}) = yield (t ha^{-1} y^{-1}) * Area (ha) = 7.5 (t ha^{-1} y^{-1}) * 200 (ha) = 1,500 (t y^{-1})	(1) Interviews of VPC and Villagers	14
	C	43.8	%	399	t y^{-1}	Carbon concentration of corn under dry conditions is 43.8%….(1) Assumption that water content of corn in above yield is 39.2%….(1) Therefore, carbon content with a water content of 39.2% (t y^{-1}) = Yield with the water content of 39.2% (t y^{-1}) * (1-water content (%)) * Carbon concentration under dry conditions (%) = 1,500 (t y^{-1}) * (1-39.2/100) * 43.8/100 ≒ 399 (t y^{-1})	(1) Nakamura M. et al. (2005) : Development of a composition database for various types of biomass, Technical Report of the National Institute for Rural Engineering, p. 70	15
	N	2.12	%	19.3	t y^{-1}	Nitrogen concentration under dry conditions is 2.12%….(1) Assumption that water content of corn in above yield is 39.2%….(1) Therefore, nitrogen content with a water content of 39.2% (t y^{-1}) = Yield of corn with the water content is 39.2% (t y^{-1}) * (1-water content (%)) * Nitrogen concentration under dry conditions (%) = 1,500 (t y^{-1}) * (1-39.2/100) * 2.12/100 ≒19.3 (t y^{-1})	(1) Nakamura M. et al. (2005) : Development of a composition database for various types of biomass, Technical Report of the National Institute for Rural Engineering, p. 70	16
(Output) Yield of sugar cane	W	62.95	t ha^{-1} y^{-1}	4,721	t y^{-1}	Yield of sugar cane in Ho Chi Minh City is 132,200 (t y^{-1}) when the cultivation area is 2,100 (ha)….(1) Therefore, calculating as 133,200 (t y^{-1})/2,100 (ha) = 62.95 (t ha^{-1} y^{-1}). Therefore, yield of sugar cane (t y^{-1}) = Yield (t ha^{-1} y^{-1}) * Area (ha) = 62.95 (t ha^{-1} y^{-1}) * 75 (ha) ≒ 4,721 (t y^{-1})	(1) Statistical Year Book 2011 (201(1) : General Statistical Office in Vietnam, pp. 366-367	17
	C	42.5	%	1,810	t y^{-1}	Carbon concentration under dry conditions is 42.5%….(1) Assumption that water content of sugar cane in above yield is 9.8%….(1) Therefore, carbon content with a water content of 9.8% (t y^{-1}) = Yield of sugar cane (t y^{-1}) * (1-water content (%)) * Carbon concentration under dry conditions (%) = 4,721 (t y^{-1}) * (1-9.8/100) * 42.5/100 ≒ 1,810 (t y^{-1})	(1) Nakamura M. et al. (2005) : Development of a composition database for various types of biomass, Technical Report of the National Institute for Rural Engineering, p. 70	18

(Output) Yield of sugar cane	N	0.8	%	34.1	t y^{-1}	Nitrogen concentration of sugar cane under dry conditions is 0.8%.…(1) Assumption that water content of sugar cane in above yield is 9.8%.…(1) Therefore, nitrogen content of sugar cane with a water content of 9.8% (t y^{-1}) = Yield of sugar cane (t y^{-1}) * (1-water content (%)) * Nitrogen concentration of sugar cane (%) = 4,721 (t y^{-1}) * (1-9.8/100) * 0.8/100 ≒ 34.1 (t y^{-1})	(1) Nakamura M. et al. (2005) : Development of a composition database for various types of biomass, Technical Report of the National Institute for Rural Engineering, p. 70	19
(Output) Yield of mango	W	0.824	t ha^{-1} y^{-1}	120	t y^{-1}	Yield of mango in Vietnam is 71,200 (t y^{-1}) when the cultivation area is 86,400 (ha).…(1) Therefore, calculating as 71,200 (t y^{-1})/86,400 (ha) = 0.824 (t ha^{-1} y^{-1}). Therefore, Yield (t y^{-1}) = Yield (t ha^{-1} y^{-1}) * Area (ha) = 0.824 (t ha^{-1} y^{-1}) * 146 (ha) ≒ 120 (t y^{-1})	(1) Statistical Year Book 2011 (201(1) : General Statistical Office in Vietnam. pp. 372-373	20
	C	40	%	9	t y^{-1}	Assumption that carbon concentration is 40%, because carbon concentration of other plants under dry conditions is about 40%.…(1) Assumption that water content of mango in above yield is 82%…(2) Therefore, carbon content (t y^{-1}) = Yield of mango with the water content of 82% (t y^{-1}) * (1-water content (%)) * Carbon concentration of mango (%) = 120 (t y^{-1}) * (1-82/100) * 40/100 ≒ 9 (t y^{-1})	(1) Nakamura M. et al. (2005) : Development of a composition database for various types of biomass, Technical Report of the National Institute for Rural Engineering, pp. 69-70 (2) Kagawa Y. ed (2003) : Food component table, Kagawa Education Institute of Nutrition Press, p. 118	21
	N	0.096	%	0.0	t y^{-1}	Protein content of mango is 0.6%.…(1) Coefficient of nitrogen concentration to protein content is 6.25.…(1) Therefore, nitrogen concentration of mango = 0.6/6.25 = 0.096 %. Assumption that water content of mango in above yield is 82%…(1) Therefore, nitrogen content of mango with a water content of 82% (t y^{-1}) = Yield of mango (t y^{-1}) * (1-water content (%)) * Nitrogen concentration of mango (%) = 120 (t y^{-1}) * (1-82/100) * 0.096/100 (%) ≒ 0.0 (t y^{-1})	(1) Kagawa Y. ed (2003) : Food component table, Kagawa Education Institute of Nutrition Press, p. 118, p. 255	22
(Input) Precipitation	W	1881.8	mm y^{-1}	7,922,378	t y^{-1}	Mean annual precipitation is 1881.8 (mm y^{-1}).…(1) Therefore, input from precipitation (t y^{-1}) = Mean annual precipitation (mm y^{-1}) * Area (ha) * 10 = 1881.8 (mm y^{-1}) * 421 (ha) * 10 = 7,922,378 (t y^{-1})	(1) Global Meteorological Information CD edited by Japan Meteorological Business Support Center	23

(Input) Precipitation	C	1.9	mg L^{-1}	15	t y^{-1}	Total carbon concentration of precipitation is 1.9 (mg L^{-1})….(1) Therefore, input from precipitation (t y^{-1}) = Total carbon concentration of precipitation (mg L^{-1}) * Precipitation rate (t y^{-1})/1,000,000 = 1.9 (mg L^{-1}) * 7,922,378 (t ha^{-1})/1,000,000 ≒ 15 (t y^{-1})	(1) Hanya T. and Ogura N. (1985) : Water quality investigation method, p. 58, Maruzen.	24
	N	1.1	mg L^{-1}	8.7	t y^{-1}	Total nitrogen concentration of precipitation is 1.1 (mg L^{-1})….(1) Therefore, input from precipitation (t y^{-1}) = Total nitrogen concentration of precipitation (mg L^{-1}) * Precipitation rate (t y^{-1})/1,000,000 = 1.1 (mg L^{-1}) * 7,922,378 (t ha^{-1})/1,000,000 ≒ 8.7 (t y^{-1})	(1) Tabuchi T. and Takamura Y. (1985) : Discharge of nitrogen and phosphorus from watershed, p. 19, University of Tokyo Press.	25
(Input) Photosynthesis	W	—	—	8,133	t y^{-1}	Carbon is provided from the air as carbon dioxide by the following formula for photosynthesis; $6CO_2 + 12H_2O \rightarrow C_6H_{12}O_6 + 6H_2O + 6O_2$ Therefore, photosynthesis rate (t y^{-1}) = 44/12 * Carbon rate taken by photosynthesis (t y^{-1}) ≒ 8,133 (t y^{-1})	Calculation based on the molecular formula of carbon dioxide	26
	C	2,218	t y^{-1}	2,218	t y^{-1}	Assumption that carbon content provided by photosynthesis is equal to the carbon content of harvest Therefore, 2,218 (t y^{-1})	Calculation by sum of carbon content of harvested corn, sugar cane and mango.	27
	N	0	t y^{-1}	0	t y^{-1}	Nitrogen is not provided by photosynthesis.	—	-
(Input) Nitrogen fixation	W	—	—	44	t y^{-1}	Weight is same as nitrogen fixation rate.	—	28
	C	0	t y^{-1}	0	t y^{-1}	Carbon is not provided by nitrogen fixation.	—	-
	N	105	kg ha^{-1} y^{-1}	44.2	t y^{-1}	Nitrogen fixation rate is 10-200 (kg ha^{-1} y^{-1})…(1), so, the average value is 105 (kg ha^{-1} y^{-1}). Therefore, nitrogen fixation rate (t y^{-1}) = Nitrogen fixation rate (kg ha^{-1} y^{-1}) * Area (ha)/1,000 = 105 (kg ha^{-1} y^{-1}) * 421 (ha)/1,000 ≒ 44.2 (t y^{-1})	(1) Systemization Sub-team, Bio-Recycle Project ed. (2006) : Design and Evaluation of Biomass Use System, pp. 30-39	29
(Output) Nitrogen loss by emission (Both ammonia volatilization and denitrification)	W	—	—	8	t y^{-1}	Weight is almost same as nitrogen loss rate by emission.	—	30
	C	0	t y^{-1}	0	t y^{-1}	Carbon is not lost by both ammonia volatilization and denitrification.	—	-
	N	18	kg ha^{-1} y^{-1}	7.6	t y^{-1}	Nitrogen loss rate by emission is 5-30 (kg ha^{-1} y^{-1})…(1), the average value is 18 (kg ha^{-1} y^{-1}). Therefore, nitrogen loss rate by emission (t y^{-1}) = Nitrogen loss rate by emission (kg ha^{-1} y^{-1}) * Area (ha)/1,000 = 18 (kg ha^{-1} y^{-1}) * 421 (ha)/1,000 ≒ 7.6 (t y^{-1})	(1) Systemization Sub-team, Bio-recycle Project ed. (2006) : Design and Evaluation of Biomass Use System, pp. 30-39	31

(Output) Carbon dioxide emission	W	—	—	3,859	t y^{-1}	Assumption that carbon loss is in the form of carbon dioxide. Therefore, carbon dioxide emission (t y^{-1}) = 44/12 * Carbon loss (t y^{-1}) ≒ 3,859 (t y^{-1})	Calculation based on the molecular formula of carbon dioxide	32
	C	2,500	kgC ha^{-1} y^{-1}	1,053	t y^{-1}	Carbon loss is 1,500-3,500 (kgC ha^{-1} y^{-1})…(1), the average value is 2,500 (kgC ha^{-1} y^{-1}). Therefore, carbon loss (t y^{-1}) = Carbon loss rate (kg ha^{-1} y^{-1}) * Area (ha)/1,000 = 2,500 (kg ha^{-1} y^{-1}) * 421 (ha)/1,000 ≒ 1,053 (t y^{-1})	(1) Systemization Sub-team, Bio-recycle Project ed. (2006) : Design and Evaluation of Biomass Use System, pp. 30-39	33
	N	0	t y^{-1}	0	t y^{-1}	Nitrogen is not lost by carbon dioxide emissions.	—	-
(Output) Evapotranspiration	W	—	—	5,545,665	t y^{-1}	Assumption that 70% of precipitation is evapotranspiration, Evapotranspiration rate (t y^{-1}) = 0.7 * Precipitation rate (t y^{-1}) = 0.7 * 7,922,378 ≒ 5,545,665(t y^{-1})	Rough assumption	34
(Output) Percolation	W	—	—	2,377,969	t y^{-1}	Assumption that percolation rate (t y^{-1}) = Precipitation rate (t y^{-1}) + (Application rate of digested slurry (using digested slurry because the water content of digested slurry is greater than 98%)) - Evapotranspiration rate (t y^{-1}) ≒ 2,377,969 (t y^{-1}) (Case that 1,255 (t y^{-1}) of digested slurry is used)	Rough assumption	35
	C	0	t y^{-1}	0	t y^{-1}	Carbon is not lost by denitrification.	—	-
	N	169.4	t y^{-1}	50.8	t y^{-1}	Nitrate leaching rate is 20-40%…(1), so the average is 30%. Therefore, nitrate leaching rate (t y^{-1}) = Nitrogen fertilization rate (t y^{-1}) * 0.3 = 169.4 (t y^{-1}) * 0.3 ≒ 50.8 (t y^{-1}) *Here, nitrogen fertilization indicates by chemical fertilizer, compost and slurry.	(1) Systemization Sub-team, Bio-recycle Project ed. (2006) : Design and Evaluation of Biomass Use System, pp. 30-39	36

Appendix 1-3 Bases of data used for regional diagnosis (livestock wastes compartment)

Data required	Component	Specific value		Total amount		Process of calculation	Data/information sources	No.
		Value	Unit	Value	Unit			
Number of pigs	—	—	—	11,000	head	—	Interviews of VPC and Villagers	1
Generation rate of feces (pig)	W	0.73	t $head^{-1}$ y^{-1}	8,030	t y^{-1}	Generation rate is 1.0-3.0 (kg $head^{-1}$ d^{-1})…(1), so the average is 2.0 (kg $head^{-1}$ d^{-1}) = 0.73 (t $head^{-1}$ y^{-1}) Therefore, raw weight (t y^{-1}) = Generation rate (t $head^{-1}$ y^{-1}) * Numbers (head) = 0.73 * 11,000 = 8,030 (t y^{-1})	(1) Nguyen T. H. L. (1994) : Study on pollutants in wastes from medium-scale pig farms and application of waste treatment methods for the piggery farms, Doctoral dissertation, Nong Lam University in Ho Chi Minh City	2
	C	18.68	%	459	t y^{-1}	Ratio of carbon to nitrogen is 20-25, and nitrogen concentration under dry conditions is 0.83 (%)….(1) Therefore, carbon concentration in dry conditions is 18.68 (%) in average. Water content of raw feces is 69.4 (%)….(2) Therefore, carbon content = Raw weight (t y^{-1}) * (1-water content (%)) * Carbon concentration under dry conditions (%) = 8,030 (t y^{-1}) * (1-69.4/100) * 18.68/100 ≒ 459 (t y^{-1})	(1) Ngo K. S. and Nguyen L. D. (1997) : Biogas production using anaerobic digestion, Book of Agriculture Publishing House, Ho Chi Minh City (2) Nakamura M. et al. (2005) : Development of a composition database for various types of biomass, Technical Report of the National Institute for Rural Engineering, pp. 57-80	3
	N	0.83	%	20.4	t y^{-1}	Nitrogen concentration under dry conditions is 0.83 (%)…(1) Water content of raw feces is 69.4 (%)….(2) Therefore, nitrogen content = Raw weight (t y^{-1}) * (1-water content (%)) * Nitrogen concentration under dry conditions (%) = 8,030 (t y^{-1}) * (1-69.4/100) * 0.83/100 ≒ 20.4 (t y^{-1})	(1) Ngo K. S. and Nguyen L. D. (1997) : Biogas production using anaerobic digestion, Book of Agriculture Publishing House, Ho Chi Minh City (2) Nakamura M. et al. (2005) : Development of a composition database for various types of biomass, Technical Report of the National Institute for Rural Engineering, pp. 57-80	4
Generation rate of urine (pig)	W	0.49	t $head^{-1}$ y^{-1}	5,390	t y^{-1}	Generation rate is 0.7-2.0 (kg $head^{-1}$ d^{-1})…(1), so the average is 1.35 (kg $head^{-1}$ d^{-1}) ≒ 0.49 (t $head^{-1}$ y^{-1}). Therefore, raw weight (t y^{-1}) = Generation rate (t $head^{-1}$ y^{-1}) * Numbers (head) = 0.49 * 11,000 = 5,390 (t y^{-1})	(1) Nguyen T. H. L. (1994) : Study on pollutants in wastes from medium-scale pig farms and application of waste treatment methods for the piggery farms, Doctoral dissertation, Nong Lam University in Ho Chi Minh City	5

Generation rate of urine (pig)	C	0	—	0	t y^{-1}	Carbon is not contained in urine.	—	-
	N	32.5	%	35.0	t y^{-1}	Nitrogen concentration under dry conditions is 32.5%, and water content of raw urine is 98.0%….(1) Therefore, nitrogen content = Raw weight (t y^{-1}) * (1-water content (%)) * Nitrogen concentration under dry conditions (%) = 5,390 (t y^{-1}) * (1-98.0/100) * 32.5/100 ≒ 35.0 (t y^{-1})	(1) Nakamura M. et al. (2005) : Development of a composition database for various types of biomass, Technical Report of the National Institute for Rural Engineering, pp. 57-80	6
Number of beef	—	—	—	1,659	head	—	Interviews of VPC and Villagers	7
Generation rate of feces (beef)	W	8.22	t $head^{-1}$ y^{-1}	13,637	t y^{-1}	Generation rate is 20-25 (kg $head^{-1}$ d^{-1})…(1), so the average is 22.5 (kg $head^{-1}$ d^{-1}) ≒ 8.22 (t $head^{-1}$ y^{-1}). Therefore, raw weight (t y^{-1}) = Generation rate (t $head^{-1}$ y^{-1}) * Numbers (head) = 8.22 * 1,659 ≒ 13,637 (t y^{-1})	(1) Nguyen T. H. L. (1994) : Study on pollutants in wastes from medium-scale pig farms and application of waste treatment methods for the piggery farms, Doctoral dissertation, Nong Lam University in Ho Chi Minh City	8
	C	15.75	%	427	t y^{-1}	Ratio of carbon to nitrogen is 20-25, and nitrogen concentration under dry conditions is 0.7 (%)…(1). Therefore, carbon concentration under dry conditions is 15.75 (%) in average. Water content of raw feces is 80.1 (%)…(2). Therefore, carbon content = Raw weight (t y^{-1}) * (1-water content (%)) * Carbon concentration under dry conditions (%) = 13,637 (t y^{-1}) * (1-80.1/100) * 15.75/100 ≒ 427 (t y^{-1})	(1) Ngo K. S. and Nguyen L. D. (1997) : Biogas production using anaerobic digestion, Book of Agriculture Publishing House, Ho Chi Minh City (2) Nakamura M. et al. (2005) : Development of a composition database for various types of biomass, Technical Report of the National Institute for Rural Engineering, pp. 57-80	9
	N	0.7	%	19.0	t y^{-1}	Nitrogen concentration under dry conditions is 0.7 (%)…(1) Water content of raw feces is 80.1 (%)….(2) Therefore, nitrogen content = Raw weight (t y^{-1}) * (1-water content (%)) * Nitrogen concentration under dry conditions (%) = 13,637 (t y^{-1}) * (1-80.1/100) * 0.7/100 ≒ 19.0 (t y^{-1})	(1) Ngo K. S. and Nguyen L. D. (1997) : Biogas production using anaerobic digestion, Book of Agriculture Publishing House, Ho Chi Minh City (2) Nakamura M. et al. (2005) : Development of a composition database for various types of biomass, Technical Report of the National Institute for Rural Engineering, pp. 57-80	10

Generation rate of urine (beef)	W	4.56	t head^{-1} y^{-1}	7,565	t y^{-1}	Generation rate is 10-15 (kg head^{-1} d^{-1})…(1), so the average is 12.5 (kg head^{-1} d^{-1}) ≒ 4.56 (t head^{-1} y^{-1}). Therefore, raw weight (t y^{-1}) = Generation rate (t head^{-1} y^{-1}) * The numbers (heads) = 4.56 * 1,659 ≒ 7,565 (t y^{-1})	(1) Nguyen T. H. L. (1994) : Study on pollutants in wastes from medium-scale pig farms and application of waste treatment methods for the piggery farms, Doctoral dissertation, Nong Lam University in Ho Chi Minh City	11
	C	0	t head^{-1} y^{-1}	0	t y^{-1}	Carbon is not contained in urine.	—	-
	N	27.1	%	14.4	t y^{-1}	Nitrogen concentration under dry conditions is 27.1%, and water content of raw urine is 99.3%.…(1) Therefore, nitrogen content = Raw weight (t y^{-1}) * (1-water content (%)) * Nitrogen concentration under dry conditions (%) = 7,565 (t y^{-1}) * (1-99.3/100) * 27.1/100 ≒ 14.4 (t y^{-1})	Nakamura M. et al. (2005) : Development of a composition database for various types of biomass, Technical Report of the National Institute for Rural Engineering, pp. 57-80	12
Number of milk cow	—	—	—	61	head	—	Interviews of VPC and Villagers	13
Generation rate of feces (milk cow)	W	8.22	t head^{-1} y^{-1}	501	t y^{-1}	Generation rate is 20-25 (kg head^{-1} d^{-1})…(1), so the average is 22.5 (kg head^{-1} d^{-1}) ≒ 8.22 (t head^{-1} y^{-1}). Therefore, raw weight (t y^{-1}) = Generation rate (t head^{-1} y^{-1}) * Numbers (head) = 8.22 * 61 ≒ 501 (t y^{-1})	(1) Nguyen T. H. L. (1994) : Study on pollutants in wastes from medium-scale pig farms and application of waste treatment methods for the piggery farms, Doctoral dissertation, Nong Lam University in Ho Chi Minh City	14
	C	8.55	%	9	t y^{-1}	Ratio of carbon to nitrogen is 20-25, and nitrogen concentration under dry conditions is 0.38 (%).…(1) Therefore, carbon concentration under dry conditions is 8.55 (%) in average. Water content of raw feces is 80.1 (%).…(2) Therefore, carbon content = Raw weight (t y^{-1}) * (1-water content (%)) * Carbon concentration under dry conditions (%) = 501 (t y^{-1}) * (1-80.1/100) * 8.55/100 ≒ 9 (t y^{-1})	1) Ngo K. S. and Nguyen L. D. (1997) : Biogas production using anaerobic digestion, Book of Agriculture Publishing House, Ho Chi Minh City 2) Nakamura M. et al. (2005) : Development of a composition database for various types of biomass, Technical Report of the National Institute for Rural Engineering, pp. 57-80	15

Generation rate of feces (milk cow)	N	0.38	%	0.4	t y^{-1}	Nitrogen concentration under dry conditions is 0.38 (%)….(1) Water content of raw feces is 80.1 (%)….(2) Therefore, nitrogen content = Raw weight (t y^{-1}) * (1-water content (%)) * Nitrogen concentration under dry conditions (%) = 501 (t y^{-1}) * (1-80.1/100) * 0.38/100 ≒ 0.4 (t y^{-1})	1) Ngo K. S. and Nguyen L. D. (1997) : Biogas production using anaerobic digestion, Book of Agriculture Publishing House, Ho Chi Minh City 2) Nakamura M. et al. (2005) : Development of a composition database for various types of biomass, Technical Report of the National Institute for Rural Engineering, pp. 57-80	16
Generation rate of urine (milk cow)	W	4.56	t $head^{-1}$ y^{-1}	278	t y^{-1}	Generation rate is 10-15 (kg $head^{-1}$ d^{-1})…(1), so the average is 12.5 (kg $head^{-1}$ d^{-1}) ≒ 4.56 (t $head^{-1}$ y^{-1}). Therefore, raw weight (t y^{-1}) = Generation rate (t $head^{-1}$ y^{-1}) * Numbers (head) = 4.56 * 61 ≒ 278 (t y^{-1})	(1) Nguyen T. H. L. (1994) : Study on pollutants in wastes from medium-scale pig farms and application of waste treatment methods for the piggery farms, Doctoral dissertation, Nong Lam University in Ho Chi Minh City	17
	C	0	t $head^{-1}$ y^{-1}	0	t y^{-1}	Carbon is not contained in urine.	—	-
	N	27.1	%	0.5	t y^{-1}	Nitrogen concentration under dry conditions is 27.1%, and water content of raw urine is 99.3%….(1) Therefore, nitrogen content = Raw weight (t y^{-1}) * (1-water content (%)) * Nitrogen concentration under dry conditions (%) = 278 (t y^{-1}) * (1-99.3/100) * 27.1/100 ≒ 0.5 (t y^{-1})	(1) Nakamura M. et al. (2005) : Development of a composition database for various types of biomass, Technical Report of the National Institute for Rural Engineering, pp. 57-80	18
Number of poultry	—	—	—	8,000	head	—	Interviews of VPC and Villagers	19
Generation rate of feces (poultry)	W	0.0435	t $head^{-1}$ y^{-1}	348	t y^{-1}	Generation rate is 0.0435 (t $head^{-1}$ y^{-1})….(1) Therefore, raw weight (t y^{-1}) = Generation rate (t $head^{-1}$ y^{-1}) * Numbers (head) = 0.0435 * 8,000 = 348 (t y^{-1})	(1) Unit for practical realization of system in Chiba Pref, Bio-recycle Project ed. (2007) Prolog for construction of Agri-biomass town, pp. 22-23	20

Generation rate of feces (poultry)	C	13.2	%	17	t y^{-1}	Ratio of carbon to nitrogen is 7-15, and nitrogen concentration under dry conditions is 1.2 (%)….(1) Therefore, carbon concentration under dry conditions is 13.2 (%) in average. Water content of raw feces is 63.7 (%)….(2) Therefore, carbon content = Raw weight (t y^{-1}) * (1-water content (%)) * Carbon concentration under dry conditions (%) = 348 (t y^{-1}) * (1-63.7/100) * 13.2/100 ≒ 17 (t y^{-1})	(1) Ngo K. S. and Nguyen L. D. (1997) : Biogas production using anaerobic digestion, Book of Agriculture Publishing House, Ho Chi Minh City (2) Nakamura M. et al. (2005) : Development of a composition database for various types of biomass, Technical Report of the National Institute for Rural Engineering, pp. 57-80	21
	N	1.2	%	1.5	t y^{-1}	Nitrogen concentration under dry conditions is 1.2 (%)….(1) Water content of raw feces is 63.7 (%)….(2) Therefore, nitrogen content = Raw weight (t y^{-1}) * (1-water content (%)) * Nitrogen concentration under dry conditions (%) = 348 (t y^{-1}) * (1-63.7/100) * 1.20/100 ≒ 1.5 (t y^{-1})	(1) Ngo K. S. and Nguyen L. D. (1997) : Biogas production using anaerobic digestion, Book of Agriculture Publishing House, Ho Chi Minh City (2) Nakamura M. et al. (2005) : Development of a composition database for various types of biomass, Technical Report of the National Institute for Rural Engineering, pp. 57-80	22
Number of buffalo	—	—	—	400	head	—	Interviews of VPC and Villagers	23
Generation rate of feces (buffalo)	W	8.22	t $head^{-1}$ y^{-1}	3,288	t y^{-1}	Generation rate is 20-25 (kg $head^{-1}$ d^{-1})…(1), so the average is 22.5 (kg $head^{-1}$ d^{-1}) ≒ 8.22 (t $head^{-1}$ y^{-1}). Therefore, raw weight (t y^{-1}) = Generation rate (t $head^{-1}$ y^{-1}) * Numbers (head) = 8.22 * 400 = 3,288 (t y^{-1})	(1) Nguyen T. H. L. (1994) : Study on pollutants in wastes from medium-scale pig farms and application of waste treatment methods for the piggery farms, Doctoral dissertation, Nong Lam University in Ho Chi Minh City	24
	C	6.98	%	46	t y^{-1}	Ratio of carbon to nitrogen is 20-25 on the assumption that the value of buffalo is same as beef, and nitrogen concentration under dry conditions 0.31 (%)….(1) Therefore, carbon concentration under dry conditions is 6.98 (%) in average. Water content of raw feces is 80.1 (%)….(2) Therefore, carbon content = Raw weight (t y^{-1}) * (1-water content (%)) * Carbon concentration under dry conditions (%) = 3,288 (t y^{-1}) * (1-80.1/100) * 6.98/100 ≒ 46 (t y^{-1})	(1) Ngo K. S. and Nguyen L. D. (1997) : Biogas production using anaerobic digestion, Book of Agriculture Publishing House, Ho Chi Minh City (2) Nakamura M. et al. (2005) : Development of a composition database for various types of biomass, Technical Report of the National Institute for Rural Engineering, pp. 57-80	25

Generation rate of feces (buffalo)	N	0.31	%	2.0	t y^{-1}	Nitrogen concentration under dry conditions is 0.31 (%)….(1) water content of raw feces is 80.1 (%)….(2) Therefore, nitrogen content = Raw weight (t y^{-1}) * (1-water content (%)) * Nitrogen concentration und conditions (%) = 3,288 (t y^{-1}) * (1-80.1/100) * 0.31/100 ≒ 2.0 (t y^{-1})	(1) Ngo K. S. and Nguyen L. D. (1997) : Biogas production using anaerobic digestion, Book of Agriculture Publishing House, Ho Chi Minh City (2) Nakamura M. et al. (2005) : Development of a composition database for various types of biomass, Technical Report of the National Institute for Rural Engineering, pp. 57-80	26
Generation rate of urine (buffalo)	W	4.56	t $head^{-1}$ y^{-1}	1,824	t y^{-1}	Generation rate is 10-15 (kg $head^{-1}$ d^{-1})…(1), so the average is 12.5 (kg $head^{-1}$ d^{-1}) ≒ 4.56 (t $head^{-1}$ y^{-1}). Therefore, raw weight (t y^{-1}) = Generation rate (t $head^{-1}$ y^{-1}) * Numbers (head) = 4.56 * 400 = 1,824 (t y^{-1})	(1) Nguyen T. H. L. (1994) : Study on pollutants in wastes from medium-scale pig farms and application of waste treatment methods for the piggery farms, Doctoral dissertation, Nong Lam University in Ho Chi Minh City	27
	C	0	t $head^{-1}$ y^{-1}	0	t y^{-1}	Carbon is not contained in urine.	—	-
	N	27.1	%	3.5	t y^{-1}	Nitrogen concentration under dry conditions is 27.1 (%), and water content of raw urine is 99.3 (%)….(1) Therefore, nitrogen content = Raw weight (t y^{-1}) * (1-water content (%)) * Nitrogen concentration under dry conditions (%) = 1,824 (t y^{-1}) * (1-99.3/100) * 27.1/100 ≒ 3.5 (t y^{-1})	(1) Nakamura M. et al. (2005) : Development of a composition database for various types of biomass, Technical Report of the National Institute for Rural Engineering, pp. 57-80	28

Appendix 2 Calculation procedures of cost for fertilization

Appendix 2-1 Operation costs

1. Conventional cultivation with chemical fertilizer

(1) Area: 2,500 m^2

An area of 2,500 m^2 was set to optimize the transportation of chemical fertilizer as shown (3) below.

(2) Weight and price of chemical fertilizer

a. The first additional fertilization

Weight of phosphorus fertilizer: 50 g m^{-2} × 2,500 m^2 = 125,000 g

Price of phosphorus fertilizer: 125,000 g × 0.14 USD kg^{-1} = 17.50 USD

Weight of Urea: 10 g m^{-2} × 2,500 m^2 = 25,000 g

Price of Urea: 25,000 g × 0.48 USD kg^{-1} = 12.00 USD

Subtotal weight: 125,000 g + 25,000 g = 150,000 g

Subtotal price: 17.50 USD + 12.0 USD = 29.50 USD

b. The second additional fertilization

Weight of mixed fertilizer: 20 g m^{-2} × 2,500 m^2 = 50,000g

Price of mixed fertilizer: 50,000 g × 0.72 USD kg^{-1} = 36.00 USD

c. The third additional fertilization

Weight of mixed fertilizer: 10 g m^{-2} × 2,500 m^2 = 25,000 g

Price of mixed fertilizer: 25,000 g × 0.72 USD kg^{-1} = 18.00 USD

Weight of potash fertilizer: 4 g m^{-2} × 2,500 m^2 = 10,000 g

Price of potash fertilizer: 10,000 g × 0.50 USD kg^{-1} = 5.00 USD

Subtotal weight: 25,000 g + 10,000 g = 35,000 g

Subtotal price: 18.00 USD + 5.00 USD = 23.00 USD

Total weight: 235,000 g

Total price: 88.50 USD

(3) Transportation

a. The first additional fertilization

150,000 g ÷ 50 kg $shuttle^{-1}$ = 3 shuttles

b. The second additional fertilization

50,000 g ÷ 50 kg shuttle^{-1} = 1 shuttle

c. The third additional fertilization

35,000 g ÷ 50 kg shuttle^{-1} = 0.7≒1 shuttle

Total: 5 shuttles

Total time: 5 shuttles × 10 min shuttle^{-1} = 50 min

Fuel consumption for a motor-cycle: 1.7 × 10^{-2} (L min^{-1}) × 50 min=0.85 L

Gasoline cost: 0.85 L × 1.06 USD L^{-1} = 0.90 USD

Labor cost: 50 min × 1.19 USD h^{-1} person^{-1} = 0.99 USD

Subtotal cost: 0.90 USD + 0.99 USD = 1.89 USD

(4) Application

Time: 235,000 g × 6.08 × 10^{-2} h kg^{-1} person^{-1}＝14.29 h person^{-1}

Labor cost: 14.29 h × 1.19 USD h^{-1} person^{-1} = 17.01 USD

(5) Irrigation water

※Water level in paddy field was increased from 0 cm to 4 cm through irrigation to dissolve chemical fertilizer and increase absorption by rice plants

Water volume: 0.04 m × 2,500 m^2 = 100 m^3

Pouring time: 100 m^3 ÷ 6.07 (L s^{-1}) =16,474.46 s

Fuel consumption of pump for irrigation: 16,474.46 s × 8.91 × 10^{-4} (L s^{-1}) =14.68 L

Gasoline cost: 14.68 L × 1.06 USD L^{-1} = 15.56 USD

Labor working time: 16,474.46 s × 0.2 + 900 s = 4,194.89 s

Labor cost for irrigation: 4,194.89 s × 1.19 USD h^{-1} person^{-1} = 1.39 USD

Subtotal cost: 15.56 USD + 1.39 USD = 16.95 USD

Total cost: 16.95 USD × 3 times = 50.85 USD

Total cost 158.25 USD for 2,500 m^2

= 6.33 × 10^{-2} USD m^{-2}

≒0.06 USD m^{-2}

2. Slurry fertilization with vacuum truck

(1) Cost for one shuttle

a. Collection of digested slurry

Running time of pump: 5.5 m^3 $shuttle^{-1}$ ÷ 4.17 L s^{-1} = 1,318.94 s $shuttle^{-1}$

Total time: 1,318.94 s $shuttle^{-1}$ + 900 s $shuttle^{-1}$= 2,218.94 s $shuttle^{-1}$

b. Transportation of digested slurry

Time: 2.5 km × 2 (one way) ÷ 0.265 km min^{-1} = 1,132.08 s $shuttle^{-1}$

c. Pouring of digested slurry

Running time of pump: 5.5 m^3 $shuttle^{-1}$ ÷ 2.98 L s^{-1} = 1,845.64 s $shuttle^{-1}$

Total time: 1,845.64 s $shuttle^{-1}$ + 900 s $shuttle^{-1}$ = 2,745.64 s $shuttle^{-1}$

d. Cost for one shuttle

Time for one shuttle: 2,218.94 s + 1,132.08 s + 2,745.64 s = 6,096.66 s≒1.69 h

Vacuum truck rental fee: 8.94 USD h^{-1} × 1.69 h = 15.11 USD $shuttle^{-1}$

※Rental fee includes 2 operators and fuel cost for transportation and pump.

Labor cost for one worker: 1.69 h × 1.19 USD $person^{-1}$ = 2.01 USD $shuttle^{-1}$

Cost for one shuttle of a vacuum truck: 15.11 + 2.01 = 17.12 USD $shuttle^{-1}$

(2) Area for one shuttle

a. Area for digested slurry with 400 mg L^{-1} of T-N

The second fertilization: 400 mg L^{-1} × 5.5 m^3 $shuttle^{-1}$ ÷ 7.9 g m^{-2}≒278.48 m^2 $shuttle^{-1}$

The third fertilization: 400 mg L^{-1} × 5.5 m^3 $shuttle^{-1}$ ÷ 3.1 g m^{-2}≒709.67 m^2 $shuttle^{-1}$

b. Area for digested slurry with 2,000 mg L^{-1} of T-N

The second fertilization: 2,000 mg L^{-1} × 5.5 m^3 $shuttle^{-1}$ ÷ 7.9 g m^{-2}≒1,392.40 m^2 $shuttle^{-1}$

The third fertilization: 2,000 mg L^{-1} × 5.5 m^3 $shuttle^{-1}$ ÷ 3.1 g m^{-2}≒3,548.38 m^2 $shuttle^{-1}$

(3) Cost for irrigation

※Water level in paddy field increased from 0 cm to 4 cm by irrigation and digested slurry of 5.5 m^3 with one shuttle.

a. Pouring of irrigation water in case of digested slurry with 400 mg L^{-1} of T-N

Water volume for the second fertilization: 0.04 m × 278.48 m^2 -5.5 m^3 =5.64 m^3

Water volume for the third fertilization: 0.04 m × 709.67 m^2 -5.5 m^3 = 22.89 m^3

Pump running time for the second fertilization: 5.64 m^3 ÷ 6.07 L s^{-1} = 929.15 s

Pump running time for the third fertilization: 22.89 m^3 ÷ 6.07 L s^{-1} = 3,771.00 s

Fuel cost of pump for the second fertilization: 929.15 s × 8.91 × 10^{-4} L s^{-1} × 1.06 USD L^{-1}
= 0.88 USD

Fuel cost of pump for the third fertilization: 3,771.00 s × 8.91 × 10^{-4} L s^{-1} × 1.06 USD L^{-1}
= 3.56 USD

Labor cost for the second fertilization: (929.15 s × 0.2 + 900 s) × 1.19 USD h^{-1} $person^{-1}$
= 0.36 USD

Labor cost for the third fertilization: (3,771.00 s × 0.2 + 900 s) × 1.19 USD h^{-1} $person^{-1}$
= 0.55 USD

b. Pouring of irrigation water in case of digested slurry with 2,000 mg L^{-1} of T-N
Water volume for the second fertilization: 0.04 m × 1,392.40 m^2 - 5.5 m^3 =50.20 m^3
Water volume for the third fertilization: 0.04m × 3,548.38 m^2 - 5.5 m^3 = 136.44 m^3
Pump running time for the second fertilization: 50.20 m^3 ÷ 6.07 L s^{-1} = 8,270.18 s
Pump running time for the third fertilization: 136.44 m^3 ÷ 6.07 L s^{-1} = 22,477.76 s

Fuel cost of pump for the second fertilization: 8,270.18 s × 8.91 × 10^{-4} L s^{-1} × 1.06 USD L^{-1}
= 7.81 USD

Fuel cost of pump for the third fertilization: 22,477.76 s × 8.91 × 10^{-4} L s^{-1} × 1.06 USD L^{-1}
= 21.23 USD
Labor cost for the second fertilization: (8,270.18 s × 0.2 + 900 s) × 1.19 USD h^{-1} $person^{-1}$
= 0.84 USD

Labor cost for the third fertilization: (22,477.76 s × 0.2 + 900 s) × 1.19 USD h^{-1} $person^{-1}$
= 1.78 USD

(4) Sum of slurry fertilization cost for vacuum truck

a. T-N of 400 mg L^{-1} in digested slurry
Cost for the second fertilization: 17.12 + 0.88 + 0.36 =18.36 USD
Cost for the second fertilization per 1m^2: 18.36 USD ÷ 278.48 m^2≒6.59 × 10^{-2} USD m^{-2}
Cost for the third fertilization: 17.12 + 3.56 + 0.55 = 21.23 USD
Cost for the third fertilization per 1m^2: 21.23 USD ÷ 709.67 m^2≒2.99 × 10^{-2} USD m^{-2}

Cost for T-N in digested slurry of 400 mg L^{-1} per $1m^2$: $6.59 \times 10^{-2} + 2.99 \times 10^{-2} = 9.58 \times 10^{-2}$ USD m^{-2}

≒0.10 USD m^{-2}

b. T-N of 2,000 mg L^{-1} in digested slurry

Cost for the second fertilization: 17.12 + 7.81 + 0.84 = 25.77 USD

Cost for the second fertilization per $1m^2$: 25.77 USD ÷ 1,392.40 m^2≒1.85×10^{-2} USD m^{-2}

Cost for the third fertilization: 17.12 + 21.23 + 1.78 = 40.13 USD

Cost for the third fertilization per $1m^2$: 40.13 USD ÷ 3,548.38 m^2≒1.13×10^{-2} USD m^{-2}

Cost for T-N in digested slurry of 2,000 mg L^{-1} per $1m^2$: $1.85 \times 10^{-2} + 1.13 \times 10^{-2}$

$= 2.98 \times 10^{-2}$ USD m^{-2}≒0.03 USD m^{-2}

3. Slurry fertilization with a prototype slurry tanker

(1) Cost for one shuttle

a. Collection of digested slurry

Running time for generator to drive pump: 2.7 m^3 $shuttle^{-1}$ ÷ 3.08 L s^{-1} = 876.62 s $shuttle^{-1}$

Total time: 876.62 s $shuttle^{-1}$ + 900 s $shuttle^{-1}$ = 1,776.62 s $shuttle^{-1}$

b. Transportation of digested slurry

Time: 2.5 km $shuttle^{-1}$ × 2 (one way) ÷ 0.265 km min^{-1} = 1,132.08 s

c. Pouring of digested slurry

Running time for generator to drive pump: 2.7 m^3 $shuttle^{-1}$ ÷ 4.62 L s^{-1} = 584.42 s $shuttle^{-1}$

Total time: 584.42 s $shuttle^{-1}$ + 900 s $shuttle^{-1}$ = 1,484.42 s $shuttle^{-1}$

d. Cost for one shuttle

Fuel cost for collection of digested slurry: 876.62 s $shuttle^{-1}$ × 9.94×10^{-4} L s^{-1} × 1.06 USD L^{-1}

≒0.92 USD $shuttle^{-1}$

Fuel cost for pouring of digested slurry: 584.42 s $shuttle^{-1}$ × 9.94×10^{-4} L s^{-1} × 1.06 USD L^{-1}

≒0.62 USD $shuttle^{-1}$

Fuel cost for one shuttle 0.92 USD $shuttle^{-1}$＋0.62 USD $shuttle^{-1}$ = 1.54 USD $shuttle^{-1}$

Time for one shuttle: 1,776.62 s + 1,132.08 s + 1,484.42 s = 4,393.12 s≒1.22 h

Rental fee for tractor: 5.96 USD h^{-1} × 1.22 h $shuttle^{-1}$ = 7.27 USD $shuttle^{-1}$

※Rental fee includes labor cost for 1 operator and fuel cost for transportation.

Labor cost for one worker: 1.22 h × 1.19 USD h^{-1} $person^{-1}$ = 1.45 USD $shuttle^{-1}$

Cost for one shuttle with prototype slurry tanker: 1.54＋7.27＋1.45 = 10.26 USD $shuttle^{-1}$

(2) Area for one shuttle

a. Area for digested slurry with 400 mg L^{-1} of T-N

The second fertilization: 400 mg L^{-1} × 2.7 m^3 $shuttle^{-1}$ ÷ 7.9 g m^{-2}≒136.71 m^2 $shuttle^{-1}$

The third fertilization: 400 mg L^{-1} × 2.7 m^3 $shuttle^{-1}$ ÷ 3.1 g m^{-2}≒348.39 m^2 $shuttle^{-1}$

b. Area for digested slurry with 2,000 mg L^{-1} of T-N

The second fertilization: 2,000 mg L^{-1} × 2.7 m^3 $shuttle^{-1}$ ÷ 7.9 g m^{-2}≒683.54 m^2 $shuttle^{-1}$

The third fertilization: 2,000 mg L^{-1} × 2.7 m^3 $shuttle^{-1}$ ÷ 3.1 g m^{-2}≒1,741.94 m^2 $shuttle^{-1}$

(3) Cost for irrigation

※Water level in paddy field was increased from 0 cm to 4 cm by irrigation and digested slurry of 2.7 m^3 by one shuttle.

a. Pouring of irrigation water in case of digested slurry with 400 mg L^{-1} of T-N

Water volume for the second fertilization: 0.04 m × 136.71 m^2 - 2.7 m^3≒2.77 m^3

Water volume for the third fertilization: 0.04 m × 348.39 m^2 - 2.7 m^3≒11.24 m^3

Pump running time for the second fertilization: 2.77 m^3 ÷ 6.07 L s^{-1}≒456.34 s

Pump running time for the third fertilization: 11.24 m^3 ÷ 6.07 L s^{-1}≒1,851.73 s

Fuel cost of pump for the second fertilization: 456.34 s × 8.91 × 10^{-4} L s^{-1} × 1.06 USD L^{-1} ≒0.43 USD

Fuel cost of pump for the third fertilization: 1,851.73 s × 8.91 × 10^{-4} L s^{-1} × 1.06 USD L^{-1} ≒1.75 USD

Labor cost for the second fertilization: (456.34 s × 0.2 + 900 s) × 1.19 USD h^{-1} $person^{-1}$ ≒0.33 USD

Labor cost for the third fertilization: (1,851.73 s × 0.2 + 900 s) × 1.19 USD h^{-1} $person^{-1}$ ≒0.42 USD

b. Pouring of irrigation water in case of digested slurry with 2,000 mg L^{-1} of T-N

Water volume for the second fertilization: 0.04 m × 683.54 m^2 - 2.7 m^3 = 24.64 m^3

Water volume for the third fertilization: 0.04 m × 1,741.94 m^2 - 2.7 m^3 = 66.98 m^3

Pump running time for the second fertilization: 24.64 m^3 ÷ 6.07 L s^{-1} = 4,059.31 s

Pump running time for the third fertilization: 66.98 m^3 ÷ 6.07 L s^{-1} = 11,034.60 s

Fuel cost of pump for the second fertilization: 4,059.31 s × 8.91 × 10^{-4} L s^{-1} × 1.06 USD L^{-1}
≒3.83 USD

Fuel cost of pump for the third fertilization: 11,034.60 s × 8.91 × 10^{-4} L s^{-1} × 1.06 USD L^{-1}
≒10.42 USD

Labor cost for the second fertilization: (4,059.31 s × 0.2 + 900 s) × 1.19 USD $h^{-1}$$person^{-1}$
≒0.57 USD

Labor cost for the third fertilization: (11,034.60 s × 0.2 + 900 s) × 1.19 USD $h^{-1}$$person^{-1}$
≒1.03 USD

(4) Sum of slurry fertilization cost by the prototype slurry tanker

a. T-N of 400 mg L^{-1} in digested slurry

Cost for the second fertilization: 10.26 + 0.43 + 0.33 = 11.02 USD $shuttle^{-1}$

Cost for the second fertilization per 1m^2: 11.02 USD $shuttle^{-1}$ ÷ 136.71 m^2 $shuttle^{-1}$
≒8.06 × 10^{-2} USD m^{-2}

Cost for the third fertilization: 10.26 + 1.75 + 0.42 = 12.43 USD $shuttle^{-1}$

Cost for the third fertilization per 1m^2: 12.43 USD ÷ 348.39 m^2 $shuttle^{-1}$≒3.57 × 10^{-2} USD m^{-2}

Cost for T-N of 400 mg L^{-1} per 1m^2 in digested slurry: 8.06 × 10^{-2} + 3.57 × 10^{-2} USD m^{-2}
≒0.12 USD m^{-2}

(Therefore, total cost for slurry fertilization with T-N of 400 mg L^{-1} in digested slurry is approximately 0.13 USD m^{-2} by adding the depreciation cost for prototype slurry tanker of 8.92×10^{-3} USD m^{-2} and maintenance and repair cost for prototype slurry tanker of 4.55×10^{-3} USD m^{-2} as mentioned in Appendix 2-2 to above operation cost of 0.12 USD m^{-2}.)

b. T-N of 2,000 mg L^{-1} in digested slurry

Cost for the second fertilization: 10.26 + 3.83 + 0.57 = 14.66 USD $shuttle^{-1}$

Cost for the second fertilization per 1m^2: 14.66 USD ÷ 683.54 m^2 $shuttle^{-1}$≒2.14 × 10^{-2} USD m^{-2}

Cost for the third fertilization 10.26 + 10.42 + 1.03 = 21.71 USD $shuttle^{-1}$

Cost for the third fertilization per 1m2: 21.71 USD $shuttle^{-1}$ ÷ 1,741.94 m^2 $shuttle^{-1}$

≒ 1.25×10^{-2} USD m^{-2}

Cost for T-N of 2,000 mg L^{-1} per 1 m^2 in digested slurry: $2.14 \times 10^{-2} + 1.25 \times 10^{-2}$

$= 3.39 \times 10^{-2}$ USD m^{-2}

(Therefore, total cost for slurry fertilization with T-N of 2,000 mg L^{-1} in digested slurry is approximately 0.04 USD m^{-2} by adding the depreciation cost for prototype slurry tanker of 2.14×10^{-3} USD m^{-2} and maintenance and repair cost for prototype slurry tanker of 1.09×10^{-3} USD m^{-2} as mentioned in Appendix 2-2 to above operation cost of 3.39×10^{-2} USD m^{-2}.)

Appendix 2-2 Depreciation, maintenance and repair costs of prototype slurry tanker

Depreciation costs

Initial investment cost for prototype slurry tanker (on the assumption that maximum depreciation period of 15 years)

Plastic tank: 429 USD (143 USD × 3 times)
Tractor trolley: 1,670 USD
Motor pump: 372 USD
Generator: 1,369 USD
Total: 429 + 1,670 + 372 + 1,369=3,840 USD

Maximum depreciation period of machine tools, pumps and generators are 15 years based on the Vietnamese guidelines for depreciation of fixed assets"45/2013/TT-BTC". The maximum depreciation period of plastic tank is assumed as 5 years.

Rice is harvested twice a year in half of paddy fields, and 3 times a year in another half of paddy fields in Thai My Village.

Therefore, the depreciation cost per crop with prototype slurry tanker can be estimated as follows;
3,840 USD ÷ 15 years ÷ 2.5 crops year^{-1} = 102.4 USD crop^{-1}

According to Appendix 2-1. 3 (1), total time for a shuttle of the prototype slurry tanker can be calculated as follows;
1,776.62 + 1,132.08 + 1,484.42 = 4,393.12 s shuttle^{-1}

(1) Area for one shuttle of prototype slurry tanker

Areas for one shuttle are shown as Appendix 2-1. 3 (2).

a. Area for the T-N in digested slurry of 400 mg L^{-1}
The second fertilization: 136.71 m^2 shuttle^{-1}

b. Area for digested slurry with 2,000 mg L^{-1} of T-N
The second fertilization: 683.54 m^2 shuttle^{-1}
* Area for the second fertilization was taken because the second fertilization is more critical than the third fertilization.

(2) Time for all procedures

According to Appendix 2-1. 3 (1) and (3), times for every procedures are shown as follows;

a. Collection and transportation of digested slurry

1,776.62 s + 1,132.08 s = 2,908.70 s

b. Pouring of digested slurry

1,484.42 s

c. Irrigation for the second fertilization*

T-N in digested slurry of 400 mg L^{-1}

456.34 s + 900 s = 1,356.34 s

T-N in digested slurry of 2,000 mg L^{-1}

4,059.31 s + 900 s = 4959.31 s

(3)-1 Sequence in 8 hours for digested slurry with 400 mg $L^{-1}$of T-N

Sequence of slurry fertilization in 8 hours is shown as Figure Ap2-1.

Time for one shuttle: 2,908.70 s + 1,484.42 s = 4,393.12 s

Number of shuttles in 8 hours: 8 h ÷ 4,393.12 s $shuttle^{-1}$ ≒ 6.56

Therefore, the maximum frequency of shuttle per day is 6 shuttles.

Therefore, maximum area for application of digested slurry per crop is estimated as follows;

6 shuttle day^{-1} × 136.71 m^2 $shuttle^{-1}$ × 14 days** = 11,483.64 m^2 $crop^{-1}$

** The second fertilization is acceptable for 14 days based on the interval of each additional fertilization.

Therefore, the depreciation cost of prototype slurry tanker per area can be estimated as follows:

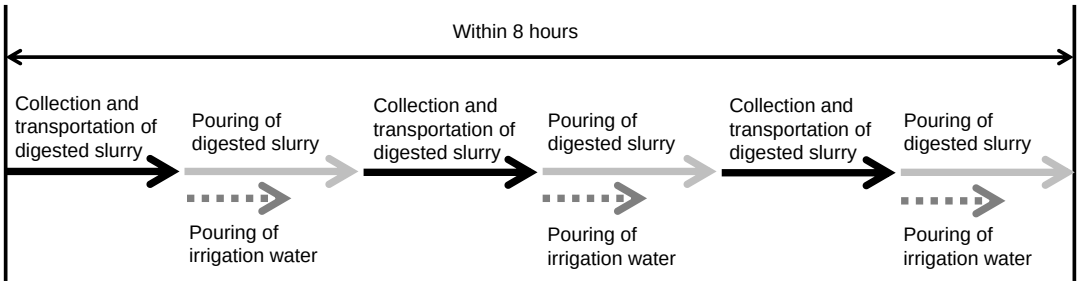

Figure Ap2-1 Sequence in 8 hours for slurry fertilization with 400 mg L^{-1} of T-N

102.4 USD crop^{-1} ÷ 11,483.64 m^2 crop^{-1} ≒ 8.92 × 10^{-3} USD m^{-2}

(3)-2 Sequence in 8 hours for digested slurry with 2,000mg L^{-1} of T-N

Sequence of slurry fertilization in 8 hours is shown as Figure Ap2-2 because time for pouring of irrigation water is longer than time for collection and transportation of digested slurry and pouring of digested slurry.

Number of shuttles in 8 hours, "n" is indicated by the following equation.

2,908.70 s shuttle^{-1} + 4959.31 s shuttle^{-1} × n < 8 h

n < 5.22

Maximum shuttles for one day is 5 shuttles.

Maximum area for application of digested slurry per crop is as follows;

5 shuttle day^{-1} × 683.54 m^2 shuttle^{-1} × 14 days = 47,847.80 m^2 crop^{-1}

Therefore, the depreciation costs of prototype slurry tanker per area can be estimated as follows:

102.4 USD crop^{-1} ÷ 47,847.80 m^2 crop^{-1} = 2.14 x 10^{-3} USD m^{-2}

Maintenance and repair cost

Maintenance and repair cost of generator to drive motor pump corresponds to the maintenance and repair cost of the prototype slurry tanker.

Here, regarding "maintenance and repair cost" as Cmr

(1) Cmr for a day in use*

= Cin × Rmr

Here,

Cin; Initial investment cost for power unit of prototype slurry tanker

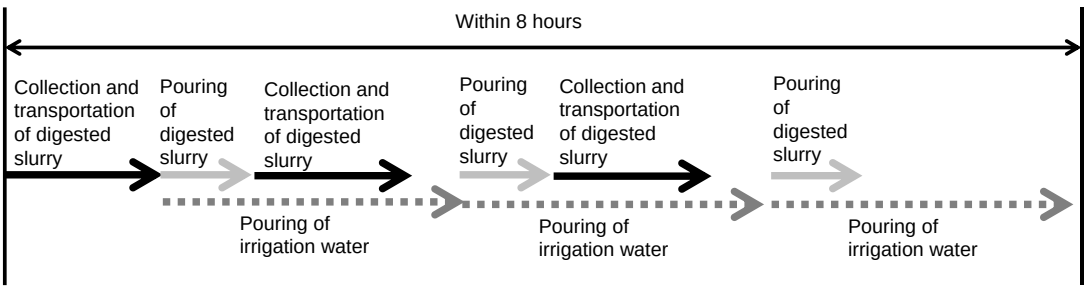

Figure Ap2-2 Sequence in 8 hours for slurry fertilization with 2,000 mg L^{-1} of T-N

Rmr1; Maintenance and repair cost rate for equivalent value with use for one day

* Ministry of Agriculture, Forestry and Fisheries (2014) Estimation standards for land improvement (for machine cost), p. 3

(1)-1 Cin here is assumed as initial investment cost for total of motor pump and generator

=372 USD + 1,369 USD = 1,741 USD

(1)-2 Rmr = (Cd + Rmr + Ram × Yst) ÷ (Dst × Yst)

Here,

Cd; Depreciation cost (Cd was neglected because calculated as shown in former part in Appendix 2-2.)

Rmr; Maintenance and repair cost rate** = 120 % of Cin

Ram; Annual management cost rate**= 7 % of Cin

Yst; Standard years in use = 15 years***

Dst; Annual standard days in use

= 14 days**** (Faf in a crop)$^{-1}$ × (2 times of Af) crop^{-1} × 2.5 crop year^{-1} = 70 days

Here,

Faf; Frequency of additional fertilization

Af; Additional fertilization

** Ministry of Agriculture, Forestry and Fisheries (2014) Estimation standards for land improvement (for machine cost), p. 182

*** Maximum depreciation period of pumps and generators is 15 years based on the Vietnamese guidelines about depreciation of fixed assets"45/2013/TT-BTC".

**** Maximum days for application of digested slurry is assumed as 14 days for each fertilization based on the interval of each additional fertilization.

In this case,

Cd can be neglected because it was calculated in another category in this study.

Therefore,

Cmr for a day in use≒3.73 USD day^{-1}

(2) Area for one shuttle

Areas for one shuttle are shown as Appendix 2-1. 3 (2)

a. Area for the T-N in digested slurry of 400 mg L^{-1}

The second fertilization: 136.71 m^2 $shuttle^{-1}$

b. Area for digested slurry with of 2,000 mg L^{-1} of T-N

The second fertilization: 683.54 m^2 $shuttle^{-1}$

(3) Cmr for prototype slurry tanker per area

T-N of 400 mg L^{-1} in digested slurry:

Cmr per area

$=3.73$ USD $day^{-1} \div (136.71\ m^2\ shuttle^{-1} \times 6\ shuttle\ day^{-1})$

$=4.55 \times 10^{-3}$ USD m^{-2}

T-N of 2,000 mg L^{-1} in digested slurry:

Cmr per area

$=3.73$ USD $day^{-1} \div (683.54\ m^2\ shuttle^{-1} \times 5\ shuttle\ day^{-1})$

$=1.09 \times 10^{-3}$ USD m^{-2}

Appendix 3 Calculation procedures of the number of milk cow in Southeast Asia

1) Data of the number of dairy cattle (=mentioned as "milk cow" in this study) of the following Southeast Asian Countries is not shown in statistical data: Brunei Darussalam, Cambodia, Lao PDR, Malaysia, Philippines, Singapore, Thailand and Timor-Leste.
2) Therefore, these data were estimated by the average ratio of dairy cattle to cattle of Indonesia, Myanmar and Vietnam.
3) The numbers and ratio of dairy cattle to cattle in Indonesia, Myanmar and Vietnam are as following table.

	The number of dairy cattle	The number of cattle	Ratio of dairy cattle to cattle	Data for year
	heads	heads	%	year
Indonesia	411,213	12,740,690	3.23	2013
Myanmar	394,135	11,313,425	3.48	2002
Vietnam	174,000	5,156,727	3.37	2013
Average	-	-	3.36	-

4) As shown in above table, average ratio of dairy cattle to cattle in existed data is calculated at 3.36%.
5) 49,271,938 heads of cattle**** in Southeast Asian Countries multiplied by 3.36% of ratio estimated 1,655,537 heads of dairy cattle in Southeast Asian Coutreis.

* The number of cattle and dairy cattle in Indonesia for 2013, FAO-GLIPHA, http://kids.fao.org/glipha/. Accessed 19 November 2015

** The number of cattle and dairy cattle in Myanmar for 2002, FAO-GLIPHA, http://kids.fao.org/glipha/. Accessed 19 November 2015

*** The number of cattle and dairy cattle for 2013, Viet Nam News http://vietnamnews.vn/economy/248720/dairy-sector-looks-to-triple-cattle-population.html Accessed 19 November 2015

**** FAO (2013a) Live Animals in 2013. In: FAOSTAT. http://faostat3.fao.org/download/Q/QA/E. Accessed 26 November 2015