Bull. Inst. Chem. Res., Kyoto Univ., Vol. 61, No. 1, 1983

Note

Frequency Characteristics of the Hartshorn Bridge

Takekazu ISHIDA, Kazushi KANODA, and Hiromasa MAZAKI*

Received January 20, 1983

We give the frequency characteristics of the conventional Hartshorn bridge from 10 Hz to 2 kHz at 4.2, 77, and 300 K. The results indicate that the response depends strongly on the resistance, the inductance, and the stray capacity of a cryostat coil.

KEY WORDS: Low temperature/ Hartshorn bridge/ Frequency dependence/ Complex susceptibility/

In a periodically varying magnetic field, the response of substance is expressed by complex susceptibility $\chi(\omega)=\chi'(\omega)-i\chi''(\omega)$. The Hartshorn-type ac bridge has been widely employed to measure $\chi(\omega)$ in the field of low-temperature physics, where χ' and χ'' are usually obtained by the change in null points of a standard mutual inductance and of a phaseshift potentiometer, respectively. However, since this method requires an elaborate effort in balancing the bridge, we reported an off-balancing technique by using two-phase lock-in analyzer, including its useful application for higher-harmonic susceptibility.[1,2] In recent years, a lot of interesting properties have been deduced from frequency dependence of susceptibility.[3] However, the fact is that the frequency characteristics of the Hartshorn bridge is not well understood. In the present note, we attempt to reveal the frequency response of the bridge. Here we used frequencies 10 Hz $\sim$2 kHz at coil temperatures 4.2, 77, and 300 K.

The present cryostat coil consists of coaxial cylindrical coils. The two inner-coils (secondary) are wound in counter direction to each other. Each of them is 3600 turns of insulated Cu wire (0.14 mm in diameter) in twenty layers. The primary coil of 5482 turns is wound in contact with the secondary coil in eight layers. The mutual inductance of sensitivity 0.01 μH can be varied from -1000 μH to 1000 μH. The phaseshift potentiometer consists of an extended wire (1 m in length), of which the sensitivity is 1 mΩ/cm and the range is from -50 mΩ to 50 mΩ. In Figs. 1 and 2, we show the null points of the standard mutual inductance (P component) and the potentiometer (Q component) with respect to frequency at 4.2, 77, and 300 K. By removing the cryostat coil from the bridge, we performed similar measurements (see Figs. 1 and 2). At each null point, the lock-in phase is set so as to give the in-phase and out-of-phase signals correctly (see Fig. 3). With the aid of Figs. 1—3, one can

* 石田武和, 鹿野田一司, 間崎啓匡: Laboratory of Nuclear Radiation, Institute for Chemical Research, Kyoto University, Kyoto, Japan.

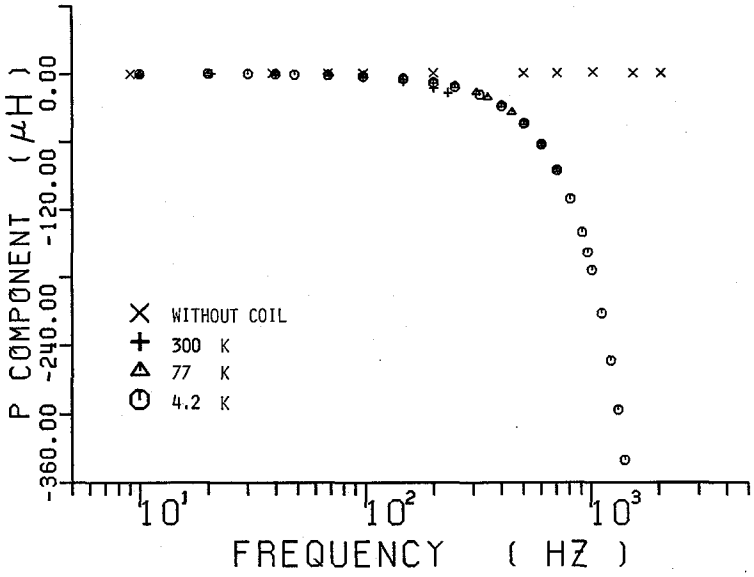

Fig. 1. Null point of the standard mutual inductance (P component) vs frequency. The amplitude of the field is 269 mOe.

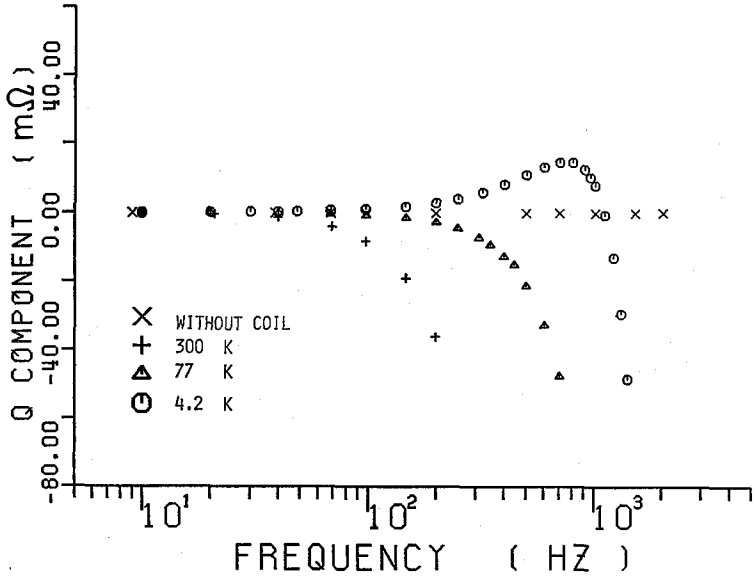

Fig. 2. Null point of the potentiometer (Q component) vs frequency. The amplitude of the field is 269 mOe.

easily find the null point at any temperature and any frequency. Consulting the measurements without the coil, it is apparent from Figs. 1—3 that the frequency dependence comes from the cryostat coil.

The possible origins of frequency-dependent behavior are: (a) the eddy current loss of windings, (b) the circuit *impurity* such as stray capacity between primary and

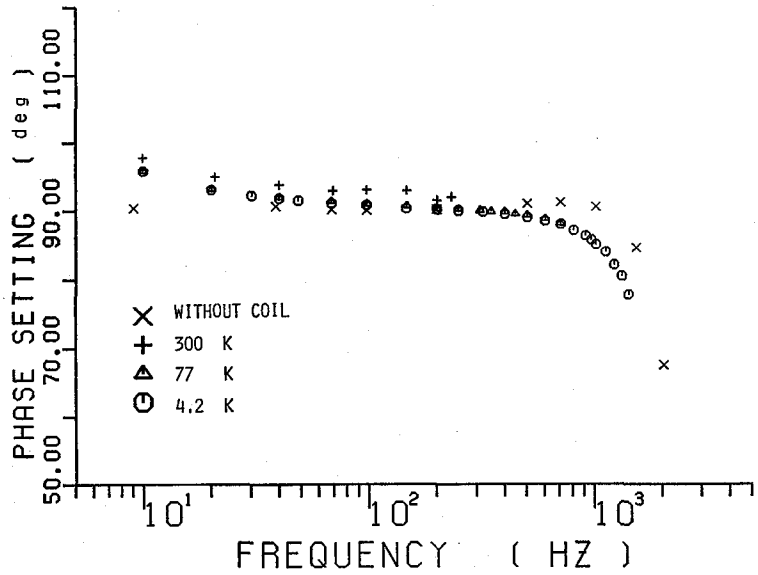

Fig. 3. Setting phase of lock-in analyzer (Ithaco model 393) vs frequency. The amplitude of the field is 269 mOe.

secondary coils, and (c) the coil inductances and resistances.[4] When the coil temperature goes down, the predominant effect would be expected to appear in its resistance, and one may assume that both the inductance and capacity give minor effect, because they depend mainly on geometry, but not on temperature.

First, we discuss the phenomena in terms of eddy current loss. We present the expression of χ' and χ'' for an annular normal conductor by[5]

$$\chi' = -\frac{1}{4\pi} \cdot \frac{1}{1+(rl/4\pi^2\omega a^2)^2}, \tag{1}$$

$$\chi'' = \frac{1}{4\pi} \cdot \frac{(rl/4\pi^2\omega a^2)}{1+(rl/4\pi^2\omega a^2)^2}, \tag{2}$$

where r is the resistance around the cylinder, l is the length of cylinder, a is the radius, and ω is the angular frequency. Equations (1) and (2) represent a usual skin effect at high frequency, and both χ' and χ'' are monistically determined by ratio r/ω. Therefore, if the effect of eddy current is the only reason to explain the observation, the profiles of χ' and χ'' plotted with respect to frequency (logarithmic scale) must be the same even for different temperatures, 4.2, 77, and 300 K, although the profiles shift in the frequency region concerned. As shown in Figs. 1 and 2, one finds that this is not the case in our results.

Second, we discuss the *impurity* effect by considering the stray capacity C between primary and secondary coils, which is not usually taken into consideration in the bridge. In Fig. 4 is shown the equivalent circuit of the Hartshorn bridge. The resistance of phase-shift potentiometer ($\sim$0.1 Ω) is negligibly small compared to that of cryostat coil.

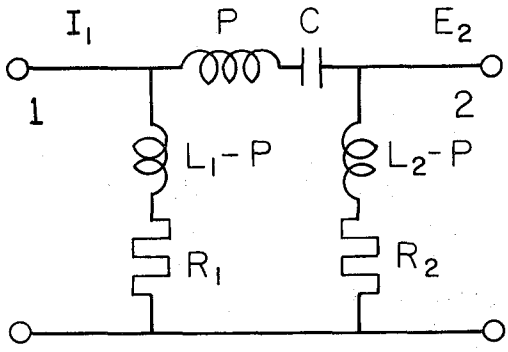

Fig. 4. The equivalent circuit of the Hartshorn bridge. R_1, R_2, L_1, and L_2 are resistances and inductances of primary and secondary coils. P is the mutual inductance and C is the stray capacity. I_1 is the primary current and E_2 is the induced secondary voltage.

The resistances of coil are about 5, 50, and 400 Ω at 4.2, 77, and 300 K, respectively. The mutual inductance (P component) is reasonably chosen as zero at null point. Then we get the transfer function $G(s)$ by

$$G(s)=\frac{Z_1Z_2Z_3}{1+Z_1Z_3+Z_2Z_3}, \tag{3}$$

where $Z_1=R_1+L_1s$, $Z_2=R_2+L_2s$, and $Z_3=Cs$ of the subsidiary variable s. Here R and L are the resistance and the inductance of coil and the subscripts denote the primary and secondary circuits. In order to normalize the output E_2 by frequency, we use a transfer function $F(s)=G(s)/R_1R_2Cs$ and analyze its frequency characteristics in terms of gain and phase. We assume $L_1=L_2=L$ and $R_1=R_2=R$. Thus, $F(s)$ can be rewritten as

$$F(s)=\frac{(1+\tau s)^2}{1+2\zeta Ts+T^2s^2}, \tag{4}$$

where $\tau=L/R$, $T=(2CL)^{1/2}$, $\zeta=R(C/2L)^{1/2}$. The inductance L used here is about 100 mH. Then τ^{-1} is approximately 50, 500, and 4000 Hz at 4.2, 77, and 300 K, respectively. From the relation $T=2\zeta\tau$, T^{-1} is about 10 kHz. We calculate gain and phase as a function of $\omega T(=10^{-3}\sim10^2)$ for $\zeta=0.0125$, 0.125, and 0.375. In Fig. 5 are shown the calculated results. In the figure, it can be seen that the frequency characteristics strongly depends upon ζ (or R). The frequency profile is not the same for three cases. This is in contrast with the eddy current effect. At the lowest $R(\zeta=0.0125)$, the gain (logarithmic scale) show a maximum. This may clue us to the Q-component maximum appeared at 4.2 K in Fig. 2.

In conclusion, we suggest that the circuit *impurity* such as stray capacity between primary and secondary coils plays an important role in the high-frequency performance of the bridge. To improve the bridge, it should be useful to make a coil of different L and R. Below 4.2 K, a superconducting cryostat coil seems to be very interesting.

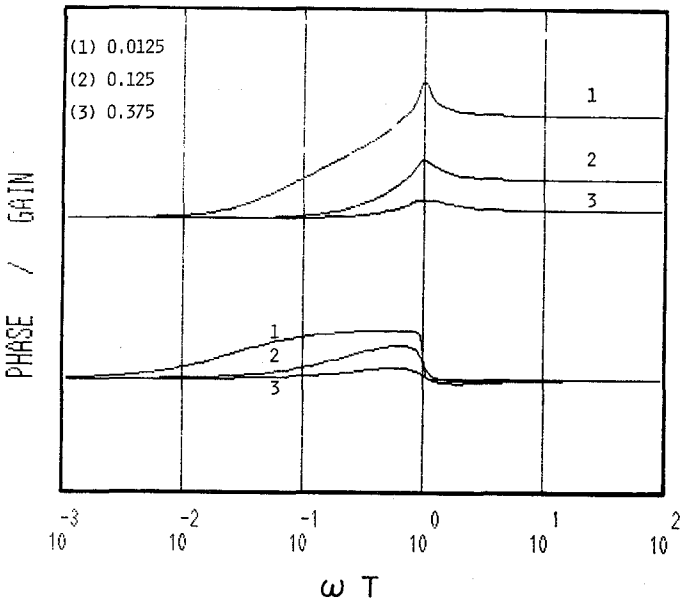

Fig. 5. Frequency characteristics of the equivalent circuit. Upper three curves are gains (arbitrary logarithmic scale) vs ωT. Lower three curves are phases (arbitrary scale) vs ωT. Inserted numbers are values of ζ.

ACKNOWLEDGMENTS

One of the authors (T. I.) is indebted to the Japan Society for the Promotion of Science for a grant.

REFERENCES

(1) T Ishida and H. Mazaki, *J. Appi. Phys.*, **52**, 6798 (1981).
(2) T. Ishida and H. Mazaki, *Phys. Lett. A*, **87**, 373 (1982).
(3) C. A. M. Mulder, A. J. van Duyneveldt, and J. A. Mydosh, *Phys. Rev.* B, **25**, 515 (1982).
(4) D. Bijl, *Thesis*, Leiden University (1950) unpublished.
(5) A. Paskin, M. Strongin, P. P. Craig, and D. G. Schweitzer, *Phys. Rev.*, **137**, A1816 (1965).