数理解析研究所講究録
499巻 1983年 135-142

On the Cowell-Numerov Type Difference Equation Generated by Finite Elements

Okayama University of Science
Masatoshi Ikeuchi 池 内 雅 紀

The Cowell-Numerov type difference operators are generated for n-dimensional linear eigensystems by non-standard finite elements and the convergence theorem for the eigenvalue is proved. Numerical example is also shown.

1. Introduction

The paper is concerned with the linear difference equation (linear eigensystem) in the form

(E) $A_h U_h = \lambda_h B_h U_h$ in $\Omega \subset R^n$

where A_h, B_h are bounded holomorphic for the parameter $h \in R_+$, and U_h is the solution associated with the eigenvalue $\lambda_h \in \sigma_h(B_h^{-1}A_h)$. Let (E) be the discrete approximation to the original differential equation $A u = \lambda B u$. Assume that A_h and B_h are second-order. Then the best rational approximant to the characteristic solution of the original equation gives rise to the Cowell-Numerov operator in $\Omega \subset R^1$ [Froberg 1970], Lambert 1979].

The objective is to form the Cowell-Numerov type(C.N.) operator in $\Omega \subset R^n$ by the use of finite elements[Milne 1980] and establish the convergence theorem for the eigenvalue $\lambda_h \to \lambda \in \sigma(B^{-1}A)$. Unfortunately, the standard finite elements [Strang & Fix 1973] cannot generate the C. N. operators. Thus we start with non-standard finite elements.

2. Preliminary

We prepare the notations:

Ω the open and bounded polygon $\subset R^n$,

Δ the Laplacian $\partial^2/\partial x_i^2$ $(i=1,2,\ldots,n)$,

R_+ the real subset $[0,+\infty)$,

$H^m(\Omega)$ the m-th order Hilbert space with the inner product

$$(u,v)_{m,\Omega} = \int_\Omega \{\Sigma_{|k|\le m}(\partial^{|k|}u/\partial x_i^{k_i})(\partial^{|k|}v/\partial x_i^{k_i})\}dx$$

and the semi-norm

$$|v|_{m,\Omega} = \{\int_\Omega (\partial^m v/\partial x_i^{m_i})^2\, dx\}^{1/2},$$

$a(v,v)$ the (stiffness) energy inner product $|v|^2_{1,\Omega}$,

$b(v,v)$ the (mass) energy inner product $|v|^2_{0,\Omega}$.

Now we present the original eigenproblem

(P1) *find* $(\lambda,u) \in R_+ \times H^2(\Omega)$, *such that*

$$-\Delta u = \lambda u \quad \textit{in } \Omega \textit{ for } u = 0 \quad \textit{on } \partial\Omega.$$

It is known [Strang & Fix 1973, Ciarlet 1978] that (P1) becomes equivalent to

(P2) *find* (λ,u) *in the admissible space* $R_+ \times H^1_0(\Omega)$, *such that*

$$a(u,v) = \lambda\, b(u,v) \quad \textit{for all } v \textit{ in } H^1_0(\Omega).$$

3.Finite Element Spaces

For the formulation of non-standard finite elements, we define the finite-dimensional subspaces S_h and V_h^α, as follows.

(T1) The trial space

$$S_h := \text{span}\{F_1,\ldots,F_N\} \subset H^1_0(\Omega)$$

in which for the piecewise linear function $f_i(x_k)$ with compact support

$$F_i(x) = \Pi_{k=1}^n f_i(x_k), \text{ and } \dim(S_h) = N.$$

(T2) The test space

$$V_h^\alpha := \text{span}\{W_1^\alpha,\ldots,W_N^\alpha\} \subset H^1_0(\Omega)$$

in which for the piecewise cubic function $w_i^\alpha(x_k)$ with compact support

$$W_i^\alpha(x) = \Pi_{k=1}^n w_i^\alpha(x_k), \text{ the parameter } \alpha = (\alpha_1,\ldots,\alpha_n) \in R_+^n,$$

and $\dim(V_h^\alpha) = N$.

Here, we choose $w_i^\alpha(x_k)$ in the form

$$w_i^\alpha(x_k) = f_i(x_k) + \alpha_k\, g_i(x_k)$$

where $g_i(x_k)$ is the cubic even function satisfying

$$\int_\Omega g_i(x_k)\, dx_k = 0.$$

Thus, using (T1) and (T2), our problem (P2) can be approximated as

(P3) *find* (λ_h, u_h) *in the trial space* $R_+ \times S_h$, *such that*

$$a(u_h, v_h) = \lambda_h\, b(u_h, v_h) \text{ for } v_h \text{ in the test space } V_h^\alpha.$$

From (P3) we can derive the following statements:

(S1) (P3) *is equivalent to the standard finite element formulation for* (P1) *if and only if the parameters* $\alpha_k = 0$ $(k=1,2,\ldots,n)$ *are chosen.*

(S2) *For arbitrary parameters* α_k $(k=1,2,\ldots,n)$, *the minimal subspace of* V_h^α *is included in* S_h.

(Proof) We know from (T2) that

$$\forall v_h = \Sigma_{i=1}^N c_i\, (f_i + \alpha_1\, g_i) \in V_h^\alpha\ ;\ \forall c_i \in R$$
$$= \Sigma_{i=1}^N c_i\, f_i \in S_h$$

for $n = 1$.

4. Difference Equation

As the trial function $u_h \in S_h$ we set

$$u_h(x) = \Sigma_{i=1}^N U_{hi}\, F_i(x)$$

where $U_{hi} = u_h(x^i)$ is the nodal eigensolution at $x^i = (x_1^i, \ldots, x_n^i)$. Then the finite element solution (λ_h, U_h) to (P3) satisfies the difference equation

(D) $A_h^\alpha\, U_h = \lambda_h\, B_h^\alpha\, U_h$

in which $U_h = \{U_{h1}, \ldots, U_{hN}\}$.

Let us show some examples for the second-order difference operators A_h and B_h in (D).

(EX1) Case of $n = 1$:

$$A_h^\alpha = -E_1 + 2I - E_1^{-1} = -\delta_1^{\,2},$$
$$B_h^\alpha = (h^2/6)[(1-\alpha_1)\, E_1 + 2(2+\alpha_1)\, I + (1-\alpha_1)\, E_1^{-1}]$$
$$= (h^2/6)[(1-\alpha_1)\, \delta_1^{\,2} + 6I]$$

where E_k is the shift operator to x_k direction and δ_k is the central difference operator.

From (EX1) we have readily the following statements:

(S3) *For an arbitrary parameter* $\alpha_1 \in R_+$, A_h *and* B_h *satisfy the consistency conditions* [Lambert 1979].

(S4) *For the parameter* $\alpha_1 = 1/2$,

$$B_h^{(1/2)} = (h^2/12)[\delta_1^{\,2} + 12I]$$

which is the Cowell-Numerov operator [Henrici 1962, Froberg 1970, Lambert 1979].

(S5) *For the parameter* $\alpha_1 = 0$,

$$B_h^{(0)} = (h^2/6)[\delta_1^{\,2} + 6I]$$

which is the standard finite element mass operator.

Therefore we call the Cowell-Numerov type (C.N.) operators both A_h^α and B_h^α with $\alpha = (1/2)$ in the paper.

(EX2) Case of n = 2:

$$A_h^\alpha = [4(4+\alpha_1+\alpha_2)I-2(1+\alpha_1+\alpha_2)(E_1+E_1^{-1}+E_2+E_2^{-1}) - (2-\alpha_1-\alpha_2)(E_1E_2+E_1E_2^{-1}+E_1^{-1}E_2+E_1^{-1}E_2^{-1})]/6,$$

$$B_h^\alpha = (h^2/36)[4(2+\alpha_1)(2+\alpha_2)I+2(2+\alpha_1)(1-\alpha_2)(E_1+E_1^{-1}+E_2+E_2^{-1}) + (1-\alpha_1)(1-\alpha_2)(E_1E_2+E_1E_2^{-1}+E_1^{-1}E_2+E_1^{-1}E_2^{-1})]$$

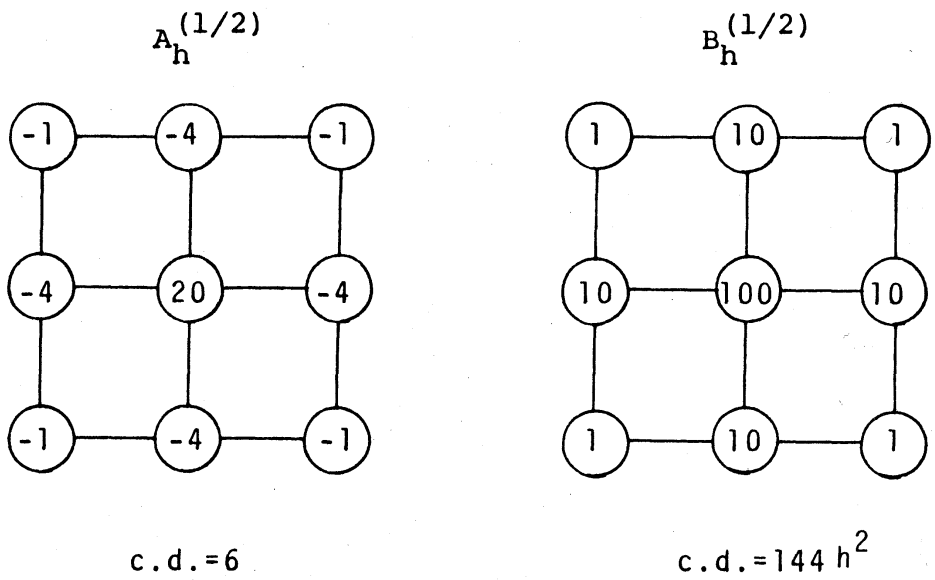

Fig.1A Cowell-Numerov type stencils for n = 2.

(EX21) The whole C.N. stencils for n=2 are illustrated in *Fig*.1A.

(EX31) The C.N. stencils for n=3 are illustrated in *Fig*.1B.

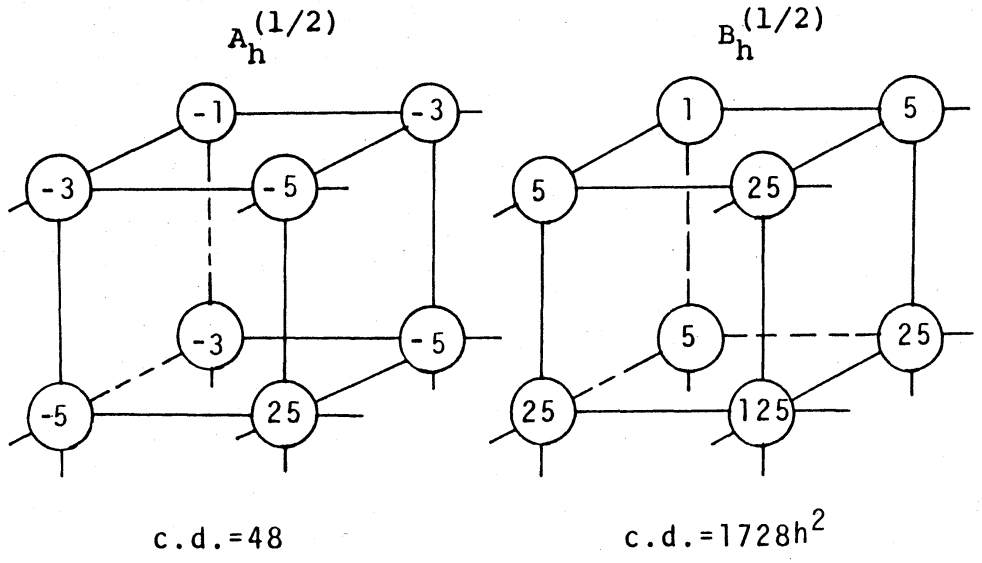

Fig.1B *Cowell-Numerov type stencils for* n = 3.

5.Error Analysis

We discuss on the error analysis of the eigenvalue λ_h in (D). For the characteristic solutions to the original equation in (P1) we meet with the approximate problem

(A1) $\exp[\pm i\sqrt{\lambda}h] = R_k \pm i(1-R_k^2)^{1/2} + \varepsilon_k/2$

where $i^2 = -1$, ε_k *is the residual term and*

$R_k(s) = [1-(s^2/6)(2+\alpha_k)]/[1+(s^2/6)(1-\alpha_k)]$ *for* $s=\sqrt{\lambda_h}h$.

For simplicity, instead of (A1) we can consider the rational approximate problem in the form

(A2) $\cos(\sqrt{\lambda}h) = R_k(\sqrt{\lambda_h}h) + \varepsilon_k$ *for* $k=1,\ldots,n$.

From the Pade approximate theory [Cheney 1966, Brezinski 1980], we have the following statements:

(S6) *The parameter* $\alpha_k = 1$ *gives the* (2/0)-*Pade approximant to* $\cos(\sqrt{\lambda}h)$ *in* (A2).

(S7) *The parameter* $\alpha_k = 1/2$ *gives the* (2/2)-*Pade approximant to* $\cos(\sqrt{\lambda}h)$ *in* (A2).

In *Table* 1, we give the (l/m)-Pade approximants to the $R_k(s)$.

Note that the standard finite element solution derivates from the Pade table, therefore it cannot gives rise to the best rational approximation.

Table 1 *Pade table for* $R_k(s)$.

	$l=0$	$l=2$	$l=4$
$m=0$	$1/1$ {*meaningless*}	$(1-s^2/2)/1$	$(1-s^2/2+s^4/24)/1$
		$\{(1-s^2/3)/(1+s^2/6)\}$*	
$m=2$		$(1-5s^2/12)/(1+s^2/12)$ ↓ *linear eigensystem*	*nonlinear* ↑
$m=4$			$(1-115s^2/252+313s^4/15120)/(1+11s^2/252+13s^4/15120)$

note: $s = \sqrt{\lambda_h}h$,

**standard linear finite elements.*

From the statement (S6) and the result in *Table* 1, we have the following convergence theorem:

(Th1) *Let* λ *and* λ_h *be sufficiently small numbers. There exists a positive constant* M_1 *such that*

$$|\sqrt{\lambda_h} - \sqrt{\lambda}| \leqq M_1 \lambda^{3/2} h^2$$

for the parameters $\alpha_k = 1$ $(k=1,\ldots,n)$.

From the statement (S7) we have the following convergence theorem with respect to the C.N. operators:

(Th2) *Let* λ *and* λ_h *be sufficiently small numbers. There exists a positive constant* M_2 *such that*

$$|\sqrt{\lambda_h} - \sqrt{\lambda}| \leqq M_2 \lambda^{5/2} h^4$$

for the parameters $\alpha_k = 1/2$ $(k=1,\ldots,n)$.

(Proof) We write

$$R_k(s) = (1-5s^2/12)/(1+s^2/12)$$

for $\alpha_k = 1/2$, in which $s = \sqrt{\lambda_h}h$. By the total differentials we have

$$\Delta R_k \simeq -[s/(1+s^2/12)^2]\Delta s = -\varepsilon_k$$

where $\Delta s = (\sqrt{\lambda_h}-\sqrt{\lambda})h$. Thus we obtain

$$s\,\Delta s \simeq (1+s^2/12)^2\,\varepsilon_k \leqq M_2\,s^6$$

for some positive constant M_2.

6.Numerical Example

We examine in numerical experiments the validity of the C.N. operators for n = 3.

*Fig.*2 shows the convergence characteristics for the ordering number of λ_h and the parameter (or element size) h.

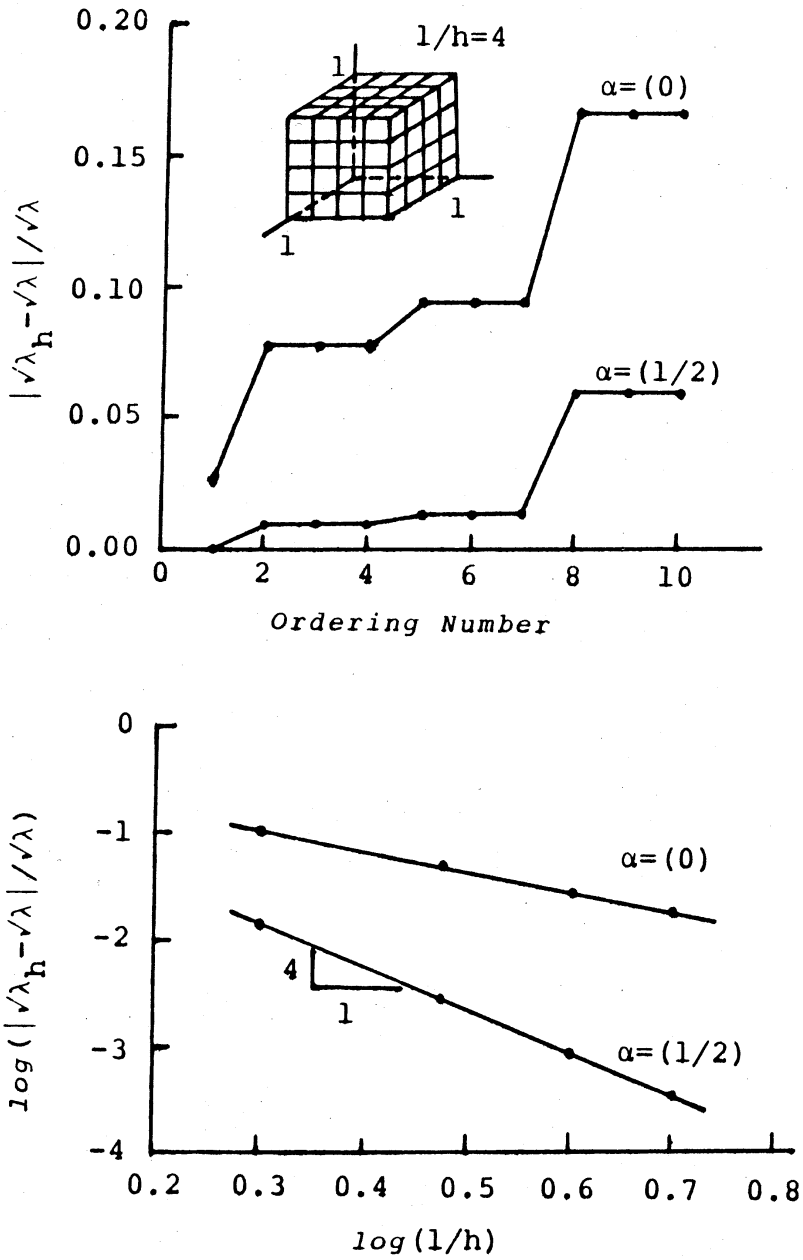

*Fig.*2 *Convergence characteristics.*

It is directly seen from the result in *Fig*.2 that (Th2) is valid and the C.N. operators are more useful than the standard finite element operators.

7.Conclusion

The main results in the paper are summarized, as follows:

(1) The Cowell-Numerov type (C.N.) operators are generated in $\Omega \subset R^n$ by the non-standard finite elements.

(2) The trial space S_h ($\subset H_0^1(\Omega)$) and the test space $V_h^\alpha \subset S_h$ are formed for the non-standard finite elements.

(3) The C.N. operators give rise to the best rational approximant to the characteristic solution.

(4) The convergence theorem for the eigenvalue λ_h associated with the C.N. operators is established by the Pade approximate theory.

It can be concluded that the C.N. operators are efficient for linear eigensystems,and that the non-standard finite elements are more extensive.

References:

Brezinski, C. : Pade-type approximation and general orthogonal polynomials, Birkhauser(1980).

Cheney, E. W. : Introduction to approximate theory,McGraw-Hill (1966).

Ciarlet,P.G.: The finite element method for elliptic problems, North-Holland(1978).

Froberg, C. -E. : Introduction to numerical analysis, Addison -Wesley, 2nd ed. (1970).

Henrici,P.: Discrete variable methods in ordinary differential equations, John Wiley & Sons(1962).

Milne, R. D.: Applied functional analysis, Pitman (1980).

Strang,G. & Fix,G.J.:An analysis of the finite element method, Prentice-Hall (1973).