IUTAM Symposium on 50 Years of Chaos : Applied and Theoretical
Kyoto, Japan, November 28 - December 2, 2011

Chaos in mechanical systems. Selected Problems

K.Kecik [1], J.Warminski [1], R.Rusinek [1]
[1] *Department of Applied Mechanics, Lublin University of Technology,20-618 Lublin, Nadbystrzycka 36.*
k.kecik@pollub.pl

1. Introduction

During the last five decades, chaotic behaviour of dynamical systems has been extensively investigated. Chaos is defined just as sensitive dependence on initial conditions and characterizes randomness of solutions and unpredictability of the behaviour in dynamical systems. Existence of chaos can be found in many numerical simulations and experimental tests [2]. In most cases, the analysis of experimentally observed chaotic behavior is confined to numerical simulations of appropriate mathematical models [1]. However, showing that a mathematical model exhibits chaotic behavior is no proof that chaos is also present in the corresponding experimental system. To show convincingly that an experimental system behaves chaotically, chaos has to be identified directly from the experimental data. For this purpose, the methods which can be used to identify experimentally observed chaos are applied. The maximal Lyapunov exponent is one the most popular and effective chaos indexes. Besides, the classical Lyapunov exponents, Poincare maps and phase space, novel methods based on the nonlinear signals analysis, like recurrence plots (RP) or recurrence quantification analysis (RQA) are used recently.

The aim of the paper is to show the chaotic motion in two mechanical systems. The first is a pendulum attached to excited vertically oscillator. This system includes autoparametric coupling and therefore is very sensitive to initial conditions and parameters. Its can produce different motions: periodic, quasi periodic and chaotic.

As a second example, the two-degree of freedom system concerns technological machining (turning) process. In this type of systems is very difficult to confirm existence of irregular motion. Both mechanical models are analyzed by numeric simulations, analytical methods, and finally verified by experimental tests. Additionally, the latest methods of chaos identification are applied to confirm chaotic dynamics experimentally.

2. Models of mechanical systems

An existence of nonlinearity is the necessary condition which may lead to chaotic behaviour. The first considered structure is composed of an oscillator with an attached pendulum (*Fig.1a*). The pendulum-like systems are designed as special dynamical absorbers. While a pendulum oscillates periodically the response of an oscillator is close to zero. However, under some circumstances a system may undergo from periodicity to more complicated, quasi-periodic or unpredictable chaotic oscillations [2]. This structure is one of the most classical systems where the chaos phenomena are confirmed by numerical simulations and experiment as well [4, 5].

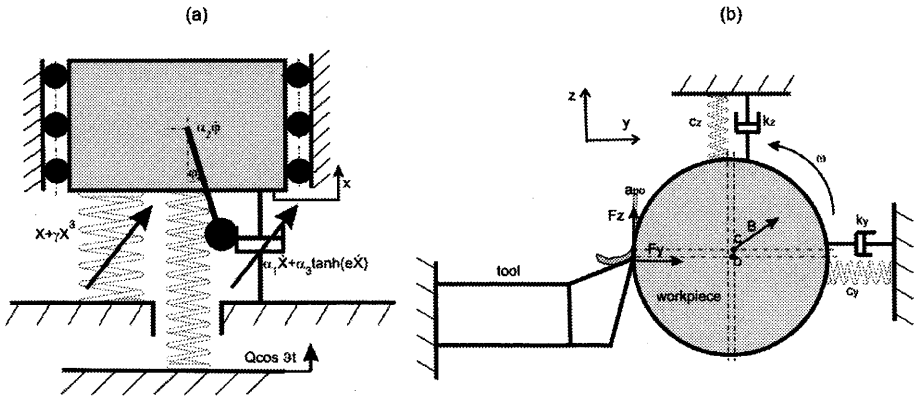

Figure1: An autoparametric system with a pendulum (a) and model of turning process (b).

The analysed system (*Fig.1a*) consist of pendulum and block mass suspended on nonlinear spring and a nonlinear magnetorheological (MR) damper. The MR damper is used to control dynamics of such a structure during dangerous situations. Nonlinear MR damping (represented by parameter α_3) is approximated by a

velocity hyperbolic *tanh* function. Moreover, a cubic nonlinear spring (parameter γ) is also included in the model. Parameters of mathematical model are identified from the real experimental setup.

The cutting process presented in *Fig.1(b)* consists in cutting away unwanted material from a rotating workpiece by a tool. Quality of this process depends on the properly selected technological parameters and structural parameters like stiffness or damping as well. In the model, the total cutting force F is a nonlinear function of the depth of the cut (a_{po}) and also the relative velocity between the tool and the chip. In the physical model of turning process presented in *Fig. 1b,* it has been assumed that the surface of a workpiece before cutting is ideally smooth. F_y is a thrust force, F_z denotes a cutting force. The stiffness k_y, k_z and damping c_y, c_z in this model are assumed to be linear. Due to the acting cutting forces the mass centre of workpiece is shifted and therefore rotating workpiece generates inertia force B. The inertia force depends on the workpiece angular velocity, mass and displacements y and z [3]. The model with an inertia force has a big meaning specially for high speed cutting (HSC).

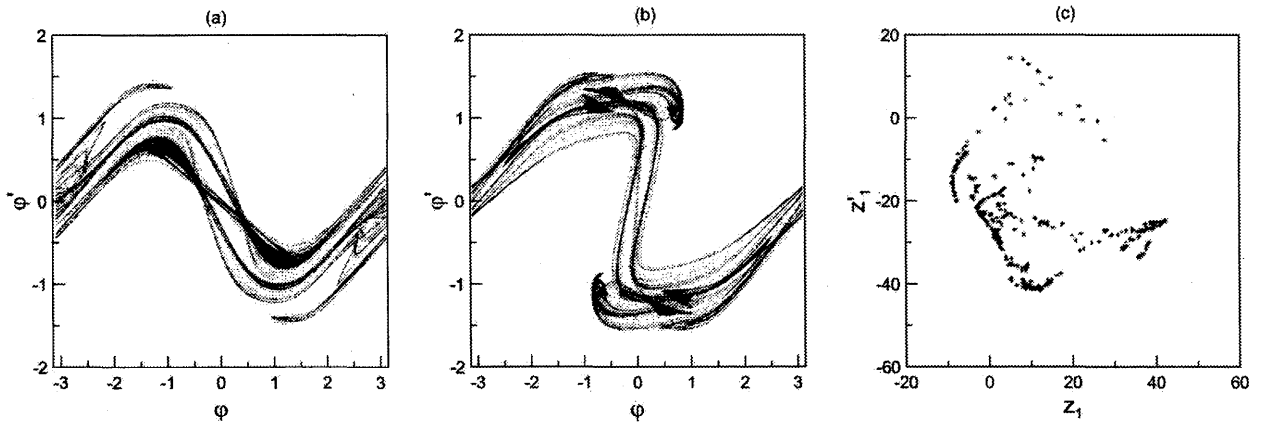

Figure 2: Exemplary chaotic attractors received for the pendulum-like system (a), (b) and reconstructed attractor for turning process (c).

In both systems, chaotic behaviour can occur. In *Fig.2a* and *2b* the numerically obtained chaotic attractors of the pendulum are shown, while in *Fig. 2c*, exemplary chaotic attractor for turning process from *Fig.1b* is presented.

Conclusions

In an autoparametric system with attached pendulum, two kinds of chaotic motion are detected: chaotic swings and chaotic motion composed of swings and rotation. The results are confirmed experimentally on a specially designed laboratory model. The reconstructed experimental attractors are in a good agreement with numerical results. In case of modelling of turning process, the chaotic response is obtained by numerical simulation. A verification of experimental results by classical approach cannot give unambiguous confirmation of the chaotic behaviour. Therefore, more advanced methods of chaos identification will be applied.

Acknowledgements

Financial support of Structural Funds in the Operational Programme – Innovative Economy (IE OP) financed from the European Regional Development Fund - Project No POIG.0101.02-00-015/08 is gratefully acknowledged.

References

[1] R. Carettero-Gonzales, H.N. Nunez-Yepez, A.L. Salas-Brito, Regular and chaotic behaviour in an extensible pendulum, *Europen Journal of Physics*, vol. 15, pp. 139–48, 1994.

[2] H. Hatwall, A.K. Mallik, A. Ghos, Forced nonlinear oscillations of an autoparametric system. *Journal of Applied Mechanics*, *Transactions of the American Society of Mechanical Engineers*, Part 2. Chaotic responses, vol. 50, pp. 663-668, 1983.

[3] R. Rusinek, K. Szabelski, J. Warminski, Vibration analysis, of two-dimensional of metal turning process. *Modern Practice in Stress and Vibration Analysis*, vol. 440-441, pp. 520-536, 2003.

[4] Y. Song, H. Sato, T. Komatsuzaki, The response of a dynamic vibration absorber system with a parametrically excited pendulum, *Journal of Sound and Vibration,* vol. 259(4), pp. 747–759, 2003.

[5] J. Warminski, K. Kecik, Instabilities in the main parametric resonance area of mechanical system with a pendulum, *Journal of Sound and Vibration*, vol. 332, pp. 612-628, 2009.