PTEP

Prog. Theor. Exp. Phys. **2015**, 033B11 (22 pages)
DOI: 10.1093/ptep/ptv027

Symmetries and Feynman rules for the Ramond sector in open superstring field theory

Hiroshi Kunitomo*

Yukawa Institute for Theoretical Physics, Kyoto University, Kyoto 606-8502, Japan
*E-mail: kunitomo@yukawa.kyoto-u.ac.jp

Received December 18, 2014; Accepted January 24, 2015; Published March 21, 2015

We examine the symmetries of the action supplemented by the constraint in the WZW-type open superstring field theory. It is found that this pseudo-action has additional symmetries provided we impose the constraint after the transformation. Respecting these additional symmetries, we propose a prescription for the new Feynman rules for the Ramond sector. It is shown that the new rules reproduce the well-known on-shell four- and five-point amplitudes with external fermions.

Subject Index B28

1. Introduction

One of the first criteria to determine whether a string field theory is acceptable or not is that its on-shell physical amplitudes are equivalent to the well-known results in the first-quantized formulation. This is well studied for bosonic string field theories. It has been proved that an arbitrary amplitude at any loop order is correctly reproduced in the cubic open string field theory [1–3] and the nonpolynomial closed string field theory [4–6]. In contrast, such considerations are still not sufficient for superstring field theories.

The most promising open superstring field theory at present is the Wess–Zumino–Witten (WZW)-type formulation proposed by Berkovits utilizing the large Hilbert space [7,8]. Its Neveu–Schwarz (NS) sector is compactly described by the WZW-type gauge-invariant action with the help of the pure-gauge string field [7]. It does not require explicit insertions of the picture-changing operators and thus does not suffer from the divergence coming from their collisions. In return for this advantage, the action becomes nonpolynomial, which obscures whether it gives the correct amplitudes or not. It has been confirmed so far that only four- [9] and five-boson [10,11] amplitudes at the tree level are correctly reproduced.

On the other hand, the Ramond (R) sector of the formulation is less well understood. While the equations of motion can be given [8], it is difficult to construct the covariant action. Then, as an alternative to an action in the usual sense, Michishita constructed an action supplemented by an appropriate constraint by introducing an auxiliary field [12]. The variation of this pseudo-action leads to the equations of motion that reduce to the desired ones after eliminating the auxiliary field by imposing the constraint. Although this is not a usual action from which we can uniquely derive

© The Author(s) 2015. Published by Oxford University Press on behalf of the Physical Society of Japan.
This is an Open Access article distributed under the terms of the Creative Commons Attribution License (http://creativecommons.org/licenses/by/4.0/), which permits unrestricted reuse, distribution, and reproduction in any medium, provided the original work is properly cited.
Funded by SCOAP[3]

Downloaded from http://ptep.oxfordjournals.org/ at Library of Research Reactor Institute, Kyoto University on October 21, 2015

the Feynman rules, it could be used as a clue to propose the Feynman rules[1] that reproduce the correct on-shell four-point amplitudes with external fermions [12]. After a while, however, it was found that these self-dual rules do not lead to the correct five-point amplitudes with two external fermions [10,11].

In order to determine the reason why the self-dual rules do not reproduce the correct amplitudes, we will examine the gauge symmetries of the theory. It has been known that the pseudo-action of the R sector has fewer gauge symmetries than those at the linearized level [12]. We will find that the missing symmetries exist provided we impose the constraint after transforming it. While these are not symmetries in the usual sense, we will assume that they have to be respected in the calculation and propose a prescription for new Feynman rules. Then, by using these new rules, we will calculate the four- and five-point amplitudes with external fermions. It will be shown that they are in fact equivalent to the amplitudes in the first quantized formulation.

This paper is organized as follows. In Sect. 2, we will first summarize the basic properties of the WZW-type open superstring field theory. The symmetries of the pseudo-action will then be studied. It will be found that it is invariant under the additional gauge symmetries if we suppose it to be subject to the constraint after the transformation. Respecting these symmetries, we will propose a prescription for the new Feynman rules, in which the R propagator has an off-diagonal form. By using these new rules, we will explicitly calculate the on-shell four- and five-point amplitudes with external fermions in Sect. 3. During the process to confirm that the four-point amplitudes are reproduced as in the self-dual rules, it will be clarified what kind of diagrams produce differences between two results by the two sets of the Feynman rules. For the five-point amplitudes, such diagrams certainly appear in the calculation of two-fermion–three-boson amplitudes that cannot be correctly reproduced by the self-dual rules. We will show that the results are actually improved, and in consequence all the five-point amplitudes come to be equivalent to those in the first quantized formulation. The final section, Sect. 4, is devoted to the conclusion and the discussion.

2. New Feynman rules in WZW-type open superstring field theory

After summarizing the known basic properties of the WZW-type open superstring field theory [7,12], we will recall the self-dual Feynman rules proposed in Ref. [12] in this section. Then, examining the gauge symmetries of the pseudo-action, we will propose a prescription for the new Feynman rules, which are more natural in the viewpoint of the symmetry.

2.1. WZW-type open superstring field theory

The conventional (small) Hilbert space $\mathcal{H}_{\text{small}}$ of the first-quantized Ramond–Neveu–Schwarz (RNS) superstring is in general described by a tensor product of those of an $N = 1$ superconformal matter with central charge $c = 15$, the reparametrization ghosts $(b(z), c(z))$ with $c = -26$, and the superconformal ghosts $(\beta(z), \gamma(z))$ with $c = 11$. The superconformal ghost system is known to be represented also by a chiral boson $\phi(z)$ $(c = 13)$ and a pair of fermions $(\eta(z), \xi(z))$ $(c = -2)$ through the bosonization formula [13],

$$\beta(z) = e^{-\phi(z)}\partial\xi(z), \quad \gamma(z) = \eta(z)e^{\phi(z)}. \tag{1}$$

[1] We call them the self-dual rules in this paper since they allow only the self-dual part (the part satisfying the linearized constraint) of the R string fields to propagate.

Downloaded from http://ptep.oxfordjournals.org/ at Library of Research Reactor Institute, Kyoto University on October 21, 2015

The large Hilbert space $\mathcal{H}_{\text{large}}$ can be introduced by replacing the Hilbert space of the superconformal ghosts in $\mathcal{H}_{\text{small}}$ by that of the bosonized fields $(\phi(z), \eta(z), \xi(z))$, which is twice as large as $\mathcal{H}_{\text{small}}$ due to the zero-mode ξ_0. The correlation function in $\mathcal{H}_{\text{large}}$ is normalized as

$$\left\langle \xi e^{-2\phi} c\partial c\partial c^2 \right\rangle = 1, \tag{2}$$

and can be nonzero if and only if the ghost and picture numbers $(G, P) = (2, -1)$ in total.

The NS (R) string field, Φ (Ψ), is defined using $\mathcal{H}_{\text{large}}$. Their free equations of motion are given by[2]

$$Q\eta\Phi = 0, \tag{3a}$$

$$Q\eta\Psi = 0, \tag{3b}$$

which are invariant under the gauge transformations

$$\delta\Phi = Q\Lambda_0 + \eta\Lambda_1, \tag{4a}$$

$$\delta\Psi = Q\Lambda_{\frac{1}{2}} + \eta\Lambda_{\frac{3}{2}}. \tag{4b}$$

Here the Q is the first-quantized BRST operator. The string fields Φ and Ψ are Grassmann even and have $(G, P) = (0, 0)$ and $(0, 1/2)$, respectively. The gauge parameter string fields $\Lambda_{n/2}$ $(n = 0, \ldots, 3)$ are Grassmann odd and have $(G, P) = (-1, n/2)$. The on-shell states satisfying (3) up to the gauge transformation (4) are equivalent to the conventional physical spectrum defined by the BRST cohomology in $\mathcal{H}_{\text{small}}$.

For the NS sector, the free equation of motion (3a) was ingeniously extended by Berkovits [7] to the nonlinear equation of motion

$$\eta\left(e^{-\Phi}\left(Qe^{\Phi}\right)\right) = 0 \tag{5}$$

derived from the variation of the the WZW-type action,

$$S_{NS} = \frac{1}{2}\left\langle \left(e^{-\Phi}Qe^{\Phi}\right)\left(e^{-\Phi}\eta e^{\Phi}\right) - \int_0^1 dt\left(e^{-t\Phi}\partial_t e^{t\Phi}\right)\left\{\left(e^{-t\Phi}Qe^{t\Phi}\right), \left(e^{-t\Phi}\eta e^{t\Phi}\right)\right\}\right\rangle. \tag{6}$$

This action (6) is invariant under the nonlinear extension of (4a),

$$e^{-\Phi}\left(\delta e^{\Phi}\right) = Q'\Lambda_0' + \eta\Lambda_1, \tag{7}$$

where $\Lambda_0' = e^{-\Phi}\Lambda_0 e^{\Phi}$. The shifted BRST operator Q' is defined as an operator that acts on a general string field A as

$$Q'A = QA + \left(e^{-\Phi}Qe^{\Phi}\right)A - (-1)^A A\left(e^{-\Phi}Qe^{\Phi}\right). \tag{8}$$

We can show that this is also nilpotent, $Q'(Q'A) = 0$, due to the identity

$$Q\left(e^{-\Phi}Qe^{\Phi}\right) + \left(e^{-\Phi}Qe^{\Phi}\right)^2 \equiv 0. \tag{9}$$

In contrast, only the equations of motion (3) can be extended to the nonlinear form,

$$\eta\left(e^{-\Phi}\left(Qe^{\Phi}\right)\right) + (\eta\Psi)^2 = 0, \tag{10a}$$

$$Q'\eta\Psi = 0, \tag{10b}$$

[2] In this paper the zero-mode η_0 of $\eta(z)$ is denoted as η, for simplicity.

Downloaded from http://ptep.oxfordjournals.org/ at Library of Research Reactor Institute, Kyoto University on October 21, 2015

for the full theory including the interaction with the R sector. The gauge transformations (4) can also be extended to the nonlinear form,

$$e^{-\Phi}\left(\delta e^{\Phi}\right) = Q'\Lambda_0 + \eta\Lambda_1 - \left\{\eta\Psi, \Lambda_{\frac{1}{2}}\right\}, \tag{11a}$$

$$\delta\Psi = Q'\Lambda_{\frac{1}{2}} + \eta\Lambda_{\frac{3}{2}} + [\Psi, \eta\Lambda_1], \tag{11b}$$

so as to keep the equations of motion (10) invariant. However, we cannot construct an action, or even its quadratic term, so as to have $(G, P) = (2, -1)$ unless we introduce the (inverse) picture-changing operator or an additional string field.

Then, as an alternative formalism, an action for the R sector,

$$S_R = -\tfrac{1}{2}\left\langle (Q\Xi)e^{\Phi}(\eta\Psi)e^{-\Phi}\right\rangle, \tag{12}$$

was proposed [12] by introducing an auxiliary Grassmann even R string field Ξ with $(G, P) = (0, -1/2)$. The equations of motion derived from the variation of $S = S_{NS} + S_R$ are

$$\eta(e^{-\Phi}(Qe^{\Phi})) + \tfrac{1}{2}\{\eta\Psi, Q'\Xi'\} = 0, \tag{13a}$$

$$Q'\eta\Psi = 0, \tag{13b}$$

$$\eta Q'\Xi' = 0, \tag{13c}$$

where $\Xi' = e^{-\Phi}\Xi e^{\Phi}$, which reduce to (10) if we eliminate the Ξ by imposing the constraint

$$Q'\Xi' = \eta\Psi. \tag{14}$$

In this sense, the action (12) is not an action in the usual sense but a pseudo-action supplemented by the constraint (14) [14].

2.2. *Gauge fixing and the self-dual Feynman rules*

We next review how tree-level amplitudes are calculated in this formulation. Let us first derive the Feynman rules for the NS sector from the action (6). Since its quadratic part,

$$S_{NS}^{(2)} = \tfrac{1}{2}\langle (Q\Phi)(\eta\Phi)\rangle, \tag{15}$$

is invariant under

$$\delta\Phi = Q\Lambda_0 + \eta\Lambda_1, \tag{16}$$

we have to fix these symmetries to obtain the propagator. We take here the simplest gauge conditions:

$$b_0\Phi = \xi_0\Phi = 0. \tag{17}$$

The NS propagator in this gauge becomes

$$\begin{aligned}\overbracket{\Phi\Phi} = \Pi_{NS} &= \frac{\xi_0 b_0}{L_0} \\ &= \int_0^{\infty} d\tau\,(\xi_0 b_0)e^{-\tau L_0}.\end{aligned} \tag{18}$$

The interaction vertices can be read by expanding (6) in the power of Φ. The three and four string vertices are

$$S_{NS}^{(3)} = -\frac{1}{3!}\left(\left\langle \Phi(Q\Phi)(\eta\Phi)\right\rangle + \left\langle \Phi(\eta\Phi)(Q\Phi)\right\rangle\right), \tag{19a}$$

$$S_{NS}^{(4)} = \frac{1}{4!}\left(\left\langle \Phi^2(Q\Phi)(\eta\Phi)\right\rangle - \left\langle \Phi^2(\eta\Phi)(Q\Phi)\right\rangle - 2\left\langle \Phi(Q\Phi)\Phi(\eta\Phi)\right\rangle\right), \tag{19b}$$

Downloaded from http://ptep.oxfordjournals.org/ at Library of Research Reactor Institute, Kyoto University on October 21, 2015

respectively, which are necessary for the calculation in the next section. It was confirmed that these Feynman rules reproduce the same on-shell physical amplitudes with four [9,15] and five [10,11] external bosons as those in the first quantized formulation.

For the R sector, however, the Feynman rules are not logically derived from the pseudo-action (12) since it is not an action in the usual sense. We summarize here the Feynman rules proposed in [12]. We first suppose that the Ξ and Ψ are independent string fields. Then the propagator can be easily read from the quadratic term,

$$S_R^{(2)} = -\tfrac{1}{2}\langle (Q\Xi)(\eta\Psi)\rangle, \tag{20}$$

as in the case of the NS sector. Fixing the gauge symmetries

$$\delta\Psi = Q\Lambda_{\frac{1}{2}} + \eta\Lambda_{\frac{3}{2}}, \tag{21a}$$

$$\delta\Xi = Q\Lambda_{-\frac{1}{2}} + \eta\tilde{\Lambda}_{\frac{1}{2}}, \tag{21b}$$

by the same conditions as (17),

$$b_0\Psi = \xi_0\Psi = 0, \quad b_0\Xi = \xi_0\Xi = 0, \tag{22}$$

we can obtain the (off-diagonal) R propagator in this gauge as

$$\begin{aligned}\overbracket{\Psi\Xi} = \overbracket{\Xi\Psi} \equiv \Pi_R &= -2\frac{\xi_0 b_0}{L_0} \\ &= -2\int_0^\infty d\tau(\xi_0 b_0)e^{-\tau L_0}.\end{aligned} \tag{23}$$

The auxiliary field Ξ is eliminated from the external on-shell states by the linearized constraint $Q\Xi = \eta\Psi$.[3] The rule not uniquely determined is how we take into account the constraint at the off-shell. A prescription for the self-dual Feynman rules is to replace $Q\Xi$ and $\eta\Psi$ in the vertices with their self-dual part $\omega = (Q\Xi + \eta\Psi)/2$, by which the part that vanishes under the (linearized) constraint is decoupled. From the cubic, quartic, and quintic terms of the action (12),

$$S_R^{(3)} = \tfrac{1}{2}\big(\langle\Phi(Q\Xi)(\eta\Psi)\rangle + \langle\Phi(\eta\Psi)(Q\Xi)\rangle\big), \tag{24a}$$

$$\begin{aligned}S_R^{(4)} = &-\tfrac{1}{4}\big(\langle(\Phi^2(Q\Xi)(\eta\Psi)\rangle - \langle\Phi^2(\eta\Psi)(Q\Xi)\rangle\big) \\ &+ \tfrac{1}{4}\big(\langle\Phi(Q\Xi)\Phi(\eta\Psi)\rangle - \langle\Phi(\eta\Psi)\Phi(Q\Xi)\rangle\big),\end{aligned} \tag{24b}$$

$$\begin{aligned}S_R^{(5)} = &\tfrac{1}{12}\big(\langle\Phi^3(Q\Xi)(\eta\Psi)\rangle + \langle\Phi^3(\eta\Psi)(Q\Xi)\rangle\big) \\ &- \tfrac{1}{4}\big(\langle\Phi^2(Q\Xi)\Phi(\eta\Phi)\rangle + \langle\Phi^2(\eta\Phi)\Phi(Q\Xi)\rangle\big),\end{aligned} \tag{24c}$$

the three, four, and five string vertices in this prescription, needed to calculate the five-point amplitudes later, are obtained as

$$\tilde{S}_R^{(3)} = \langle\Phi\omega^2\rangle, \tag{25a}$$

$$\tilde{S}_R^{(4)} = 0, \tag{25b}$$

$$\tilde{S}_R^{(5)} = \tfrac{1}{6}\langle\Phi^3\omega^2\rangle - \tfrac{1}{2}\langle\Phi^2\omega\Phi\omega\rangle, \tag{25c}$$

[3] Note that the linearized constraint is sufficient to impose on the external (asymptotic) on-shell states.

Downloaded from http://ptep.oxfordjournals.org/ at Library of Research Reactor Institute, Kyoto University on October 21, 2015

respectively. In particular, the two-fermion–two-boson vertex (or generally two-fermion–even-boson vertices) vanishes in this prescription [12]. The propagator has the form

$$\overbracket{\omega\omega} = \tfrac{1}{4}\big(Q\Pi_R\eta + \eta\Pi_R Q\big), \tag{26}$$

from (23). It was shown that these self-dual Feynman rules reproduce the well-known four-point amplitudes [12], but unfortunately do not do the five-point amplitudes with two external fermions [10,11]. The extra contributions including no propagator are not completely cancelled by those from the five string interaction (25c), and remain nonzero.

2.3. *Gauge symmetries and the new Feynman rules*

In order to find out the reason why the self-dual Feynman rules do not work well, let us examine the gauge symmetries in detail. The total (pseudo-)action, $S = S_{NS} + S_R$, is invariant under the gauge transformations,

$$e^{-\Phi}\big(\delta e^{\Phi}\big) = Q'\Lambda_0' + \eta\Lambda_1, \tag{27a}$$

$$\delta\Psi = \eta\Lambda_{\frac{3}{2}} + \big[\Psi, \eta\Lambda_1\big], \quad \delta\Xi = Q\Lambda_{-\frac{1}{2}} + \big[Q\Lambda_0, \Xi\big]. \tag{27b}$$

Since these symmetries are compatible with the self-dual anti-self-dual decomposition of the R strings,

$$\delta\big(Q'\Xi' \pm \eta\Psi\big) = \big[\big(Q'\Xi' \pm \eta\Psi\big), \eta\Lambda_1\big], \tag{28}$$

they are also the symmetries of the constraint (14), and so respected by the self-dual Feynman rules.[4] Nevertheless, these symmetries do not include all the symmetries of the linearized level, (21). The missing transformations extended to the nonlinear form

$$e^{-\Phi}\Big(\delta e^{\Phi}\Big) = -\tfrac{1}{2}\Big\{Q'\Xi', \Lambda_{\frac{1}{2}}\Big\} + \tfrac{1}{2}\Big\{\eta\Psi, \tilde{\Lambda}_{\frac{1}{2}}\Big\}, \tag{29a}$$

$$\delta\Psi = Q'\Lambda_{\frac{1}{2}}, \qquad \delta\Xi = e^{\Phi}\Big(\eta\tilde{\Lambda}_{\frac{1}{2}}\Big)e^{-\Phi}, \tag{29b}$$

transform the action to the form proportional to the constraint:

$$\delta S = \tfrac{1}{4}\Big\langle\Lambda_{\frac{1}{2}}\Big[\big(Q'\Xi'\big)^2, \big(Q'\Xi' - \eta\Psi\big)\Big]\Big\rangle + \tfrac{1}{4}\Big\langle\tilde{\Lambda}_{\frac{1}{2}}\Big[(\eta\Psi)^2, \big(Q'\Xi' - \eta\Psi\big)\Big]\Big\rangle. \tag{30}$$

In other words, the action is invariant under (29) provided we impose the constraint after the transformation. Their consistent part with the constraint, obtained by putting $\tilde{\Lambda}_{1/2} = -\Lambda_{1/2}$, reduce to the symmetries (11) of the equations of motion (10) if we eliminate the Ξ by the constraint. These are not the symmetries in the usual sense, but have to be important properties to characterize the action. Therefore, it is natural to consider that a reason why the self-dual rules do not work is because the replacement to the self-dual part ω of $Q\Xi$ and $\eta\Psi$ breaks these symmetries. This leads us to propose the following alternative prescription for the (tree-level) Feynman rules:

- Use the off-diagonal propagator (23) for the R string.
- Use the vertices (24) as they are without restricting both of $Q\Xi$ and $\eta\Psi$ to their self-dual part.
- Add two possibilities, Ξ and Ψ, of each external fermion and impose the linearized constraint $Q\Xi = \eta\Psi$ on the on-shell external states.

[4] It is not clear whether it is sufficient to take into account the linearized constraint to define the self-dual part ω or not.

Downloaded from http://ptep.oxfordjournals.org/ at Library of Research Reactor Institute, Kyoto University on October 21, 2015

We claim this prescription respecting all the gauge symmetries, including those in the above sense, is more appropriate for the Feynman rules read from the pseudo-action (12).

3. Amplitudes with external fermions

In this section, we will explicitly calculate the on-shell four- and five-point amplitudes with external fermions using the new Feynman rules. It will be shown that the equivalent amplitudes to those in the first quantized formulation are correctly reproduced.

3.1. Four-point amplitudes

The on-shell four-point amplitudes with external fermions were already calculated using the self-dual Feynman rules, and shown to be equivalent to those obtained in the first quantized formulation [12]. We first show that the new Feynman rules also reproduce the same results.

Let us start from the calculation of the four-fermion amplitude $\mathcal{A}_{FFFF}$ with fixed color ordering. Since there is no four-fermion vertex in (24b), the contributions only come from the s- and t-channel diagrams in Fig. 1. We take a convention that the fermion legs and propagators in the Feynman diagrams are colored with gray.

If we label each four external states A, B, C, and D, the s-channel contribution is calculated as

$$\begin{aligned}\mathcal{A}^{(s)}_{FFFF} = \left(\tfrac{1}{2}\right)^2 \int_0^\infty d\tau \big\langle \big(Q\Xi_A(1)\eta\Psi_B(2) + \eta\Psi_A(1)Q\Xi_B(2)\big) \\ \times \big(\xi_c b_c\big)\big(Q\Xi_C(3)\eta\Psi_D(4) + \eta\Psi_C(3)Q\Xi_D(4)\big)\big\rangle_W,\end{aligned} \tag{31}$$

where the correlation is evaluated as the conformal field theory on the Witten diagram given in Fig. 2.

The ξ_c and b_c denote the corresponding fields integrated along the path c depicted on the diagram. Each leg is numbered from 1 to 4, but this is redundant if we always arrange the external states in order of the numbers from the left, as in (31). Taking this convention, we omit hereafter to indicate them. Then the t-channel contribution can similarly be calculated as

$$\mathcal{A}^{(t)}_{FFFF} = \left(\tfrac{1}{2}\right)^2 \int_0^\infty d\tau \big\langle \big(Q\Xi_B\eta\Psi_C + \eta\Psi_B Q\Xi_C\big)\big(\xi_c b_c\big)\big(Q\Xi_D\eta\Psi_A + \eta\Psi_D Q\Xi_A\big)\big\rangle_W. \tag{32}$$

These two contributions are essentially the same as those obtained using the self-dual rules [12] and are combined into the conventional four-point amplitude as

$$\begin{aligned}\mathcal{A}_{FFFF} &= \mathcal{A}^{(s)}_{FFFF} + \mathcal{A}^{(t)}_{FFFF} \\ &= \tfrac{1}{4}\int_0^\infty d\tau \Big(\big\langle \big(Q\Xi_A\eta\Psi_B + \eta\Psi_A Q\Xi_B\big)\big(\xi_c b_c\big)\big(Q\Xi_C\eta\Psi_D + \eta\Psi_C Q\Xi_D\big)\big\rangle_W \\ &\quad + \big\langle \big(Q\Xi_B\eta\Psi_C + \eta\Psi_B Q\Xi_C\big)\big(\xi_c b_c\big)\big(Q\Xi_D\eta\Psi_A + \eta\Psi_D Q\Xi_A\big)\big\rangle_W\Big), \\ &= \int_0^\infty d\tau \big(\langle \eta\Psi_A\eta\Psi_B\big(\xi_c b_c\big)\eta\Psi_C\eta\Psi_D\rangle_W + \langle \eta\Psi_B\eta\Psi_C\big(\xi_c b_c\big)\eta\Psi_D\eta\Psi_A\rangle_W\big),\end{aligned} \tag{33}$$

where, in the last equality, we eliminate the auxiliary field Ξ from the on-shell external states by imposing the linearized constraint $Q\Xi = \eta\Psi$. Recalling that the BRST-invariant fermion vertex operator in the $-1/2$ picture is included in Ψ in the form $\Psi = \xi_0 V^{(-1/2)}$, we can explicitly map

Downloaded from http://ptep.oxfordjournals.org/ at Library of Research Reactor Institute, Kyoto University on October 21, 2015

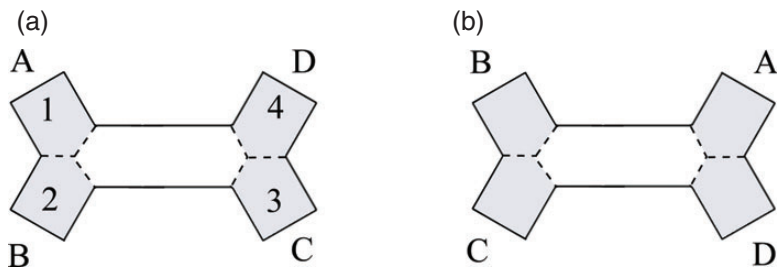

Fig. 1. Two Feynman diagrams for four-fermion amplitude: (a) s-channel and (b) t-channel. Each leg is numbered from 1 to 4 as depicted in (a). The fermion legs are colored with gray.

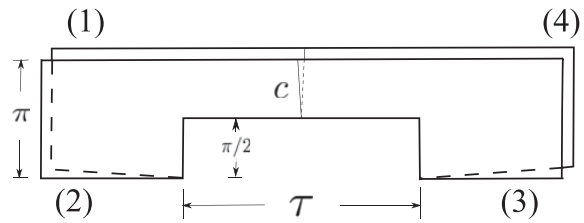

Fig. 2. The Witten diagram for four-point amplitudes. Each of the four legs is numbered from (1) to (4), corresponding to those in Fig. 1. They should be read as semi-infinite strips.

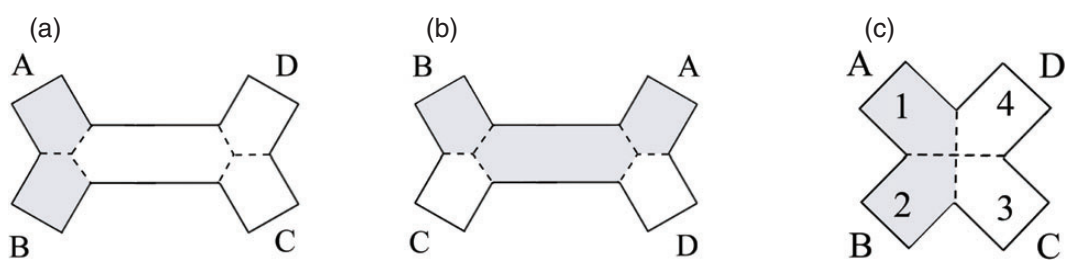

Fig. 3. Three Feynman diagrams for two-boson–two-fermion amplitude with ordering *FFBB*: (a) s-channel, (b) t-channel, and (c) four-string interaction. The fermion legs and propagator are colored gray.

the last expression in (33) to that evaluated on the upper half-plane [16]:

$$\mathcal{A}_{FFFF} = \int_0^1 d\alpha \left\langle \xi_0 \left(\int d^2 z \mu_\alpha(z,\bar{z}) b(z) \right) V_A^{\left(-\frac{1}{2}\right)}\left(-\alpha^{-1}\right) V_B^{\left(-\frac{1}{2}\right)}(-\alpha) V_C^{\left(-\frac{1}{2}\right)}(\alpha) V_D^{\left(-\frac{1}{2}\right)}\left(\alpha^{-1}\right) \right\rangle_{UHP}. \tag{34}$$

Here $\mu_\alpha(z,\bar{z})$ is the appropriate Beltrami differential for an α-dependent parametrization of the modulus [9].

The two-fermion–two-boson amplitude with color-ordering *FFBB* has three contributions from s-channel, t-channel, and four-string interaction diagrams in Fig. 3.

The s-channel contribution is evaluated as

$$\begin{aligned}\mathcal{A}^{(s)}_{FFBB} &= \tfrac{1}{2}\cdot\left(-\tfrac{1}{2}\right)\int_0^\infty d\tau \left\langle \left(Q\Xi_A \eta\Psi_B + \eta\Psi_A Q\Xi_B\right)\left(\xi_c b_c\right)\left(Q\Phi_C \eta\Phi_D + \eta\Phi_C Q\Phi_D\right)\right\rangle_W \\ &= -\tfrac{1}{2}\int_0^\infty d\tau \left\langle \left(Q\Xi_A \eta\Psi_B + \eta\Psi_A Q\Xi_B\right)\left(\xi_c b_c\right) Q\Phi_C \eta\Phi_D\right\rangle_W \\ &\quad + \tfrac{1}{4}\left\langle \left(Q\Xi_A \eta\Psi_B + \eta\Psi_A Q\Xi_B\right)\Phi_C\Phi_D\right\rangle_W,\end{aligned} \tag{35}$$

Downloaded from http://ptep.oxfordjournals.org/ at Library of Research Reactor Institute, Kyoto University on October 21, 2015

where, in the second equality, we moved the Q and η on the external bosons so that each of them has single forms $Q\Phi_C$ and $\eta\Phi_D$. Consequently, the extra contribution, which does not include the propagator (proper time integration), is produced from the boundary at $\tau = 0$ when we exchange the order of the Q and b_c, due to the relation

$$\int_0^\infty d\tau \{Q, b_0\} e^{-\tau L_0} = \int_0^\infty d\tau L_0 e^{-\tau L_0} = -\int_0^\infty d\tau \frac{\partial}{\partial\tau} e^{-\tau L_0}. \tag{36}$$

The t-channel contribution is similarly calculated as

$$\begin{aligned}\mathcal{A}^{(t)}_{FFBB} &= -\left(-\tfrac{1}{2}\right)^2 \cdot (-2) \int_0^\infty d\tau \\ &\quad \times \left(\left\langle Q\Xi_B \Phi_C \left(\eta\xi_c b_c Q\right)\Phi_D \eta\Psi_A\right\rangle_W + \left\langle \eta\Psi_B \Phi_C \left(Q\xi_c b_c \eta\right)\Phi_D Q\Xi_A\right\rangle_W\right) \\ &= -\tfrac{1}{2}\int_0^\infty d\tau \left(\left\langle Q\Xi_B Q\Phi_C \left(\xi_c b_c\right)\eta\Phi_D \eta\Psi_A\right\rangle_W + \left\langle \eta\Psi_B Q\Phi_C \left(\xi_c b_c\right)\eta\Phi_D Q\Xi_A\right\rangle_W\right) \\ &\quad - \tfrac{1}{2}\left\langle \eta\Psi_A Q\Xi_B \Phi_C \Phi_D\right\rangle_W,\end{aligned} \tag{37}$$

which was deformed again so that each external boson has the same forms, $Q\Phi_C$ and $\eta\Phi_D$, as in the s-channel contribution. Adding the contribution from the four-string interaction, which we can read from (24b) as

$$\mathcal{A}^{(4)}_{FFBB} = -\tfrac{1}{4}\left\langle \left(Q\Xi_A \eta\Psi_B - \eta\Psi_A Q\Xi_B\right)\Phi_C \Phi_D\right\rangle_W, \tag{38}$$

the total amplitude becomes

$$\begin{aligned}\mathcal{A}_{FFBB} &= \mathcal{A}^{(s)}_{FFBB} + \mathcal{A}^{(t)}_{FFBB} + \mathcal{A}^{(4)}_{FFBB} \\ &= -\tfrac{1}{2}\int_0^\infty d\tau \left(\left\langle Q\Xi_A \eta\Psi_B \left(\xi_c b_c\right) Q\Phi_C \eta\Phi_D\right\rangle_W + \left\langle \eta\Psi_A Q\Xi_B \left(\xi_c b_c\right) Q\Phi_C \eta\Phi_D\right\rangle_W \right. \\ &\quad \left. + \left\langle \eta\Psi_B Q\Phi_C \left(\xi_c b_c\right)\eta\Phi_D Q\Xi_A\right\rangle_W + \left\langle Q\Xi_B Q\Phi_C \left(\xi_c b_c\right)\eta\Phi_D \eta\Psi_A\right\rangle_W\right) \\ &= -\int_0^\infty d\tau \left(\left\langle \eta\Psi_A \eta\Psi_B \left(\xi_c b_c\right) Q\Phi_C \eta\Phi_D\right\rangle_W + \left\langle \eta\Psi_B Q\Phi_C \left(\xi_c b_c\right)\eta\Phi_D \eta\Psi_A\right\rangle_W\right).\end{aligned} \tag{39}$$

We again eliminated the Ξ in the last expression by the linearized constraint. It should be noted here that the extra contributions with no propagator in (35) and (37) are cancelled by that from the four-string interaction diagram (38) without imposing the constraint. Using the fact that the BRST-invariant NS vertex operator in the -1 picture is included in the Φ in a form such as $\eta\Phi = V^{(-1)}$, and so $Q\Phi = \{Q, \xi_0\}V^{(-1)} = V^{(0)}$, we can again map the result (39) to the form

$$A_{FFBB} = -\int_0^1 d\alpha \left\langle \xi_0 \left(\int d^2 z \mu_\alpha(z,\bar{z}) b(z)\right) V_A^{\left(-\frac{1}{2}\right)}\left(-\alpha^{-1}\right) V_B^{\left(-\frac{1}{2}\right)}(-\alpha) V_C^{(0)}(\alpha) V_D^{(-1)}\left(\alpha^{-1}\right)\right\rangle_{UHP}. \tag{40}$$

This is equivalent to that obtained in the first quantized formulation.[5]

[5] The overall minus sign can be absorbed into the phase convention for how the fermion vertex operator is embedded in Ψ. This has to be fixed by imposing the reality condition on Ψ.

Downloaded from http://ptep.oxfordjournals.org/ at Library of Research Reactor Institute, Kyoto University on October 21, 2015

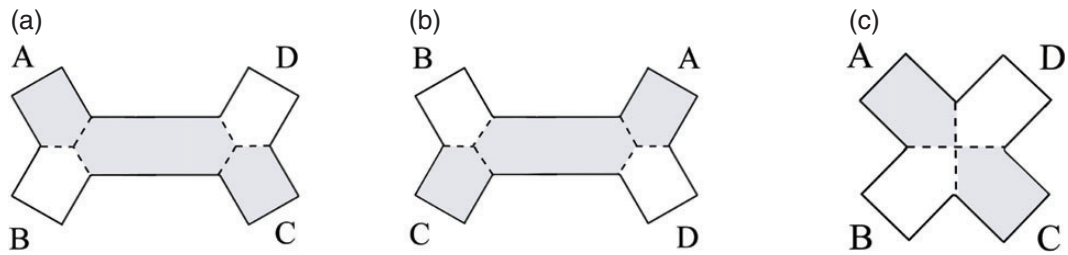

Fig. 4. Three Feynman diagrams for two-boson–two-fermion amplitude with ordering *FBFB*: (a) s-channel, (b) t-channel, and (c) four-string interaction.

The last four-point amplitude is that for two-boson–two-fermion scattering with ordering *FBFB*. It also has three contributions from the three diagrams in Fig. 4, which can be given by

$$\mathcal{A}^{(s)}_{FBFB} = -\tfrac{1}{2}\int_0^\infty d\tau\big(\langle Q\Xi_A Q\Phi_B(\xi_c b_c)\eta\Psi_C\eta\Phi_D\rangle_W + \langle\eta\Psi_A Q\Phi_B(\xi_c b_c)Q\Xi_C\eta\Phi_D\rangle_W\big) - \tfrac{1}{2}\langle Q\Xi_A\Phi_B\eta\Psi_C\Phi_D\rangle_W, \tag{41a}$$

$$\mathcal{A}^{(t)}_{FBFB} = -\tfrac{1}{2}\int_0^\infty d\tau\big(\langle Q\Phi_B Q\Xi_C(\xi_c b_c)\eta\Phi_D\eta\Psi_A\rangle_W + \langle Q\Phi_B\eta\Psi_C(\xi_c b_c)\eta\Phi_D Q\Xi_A\rangle_W\big) + \tfrac{1}{2}\langle\eta\Psi_A\Phi_B Q\Xi_C\Phi_D\rangle_W, \tag{41b}$$

$$\mathcal{A}^{(4)}_{FBFB} = \tfrac{1}{2}\big(\langle Q\Xi_A\Phi_B\eta\Psi_C\Phi_D\rangle_W - \langle\eta\Psi_A\Phi_B Q\Xi_C\Phi_D\rangle_W\big), \tag{41c}$$

by deforming so that the external boson states have the common forms $Q\Phi_B$ and $\eta\Phi_D$. The extra contributions in (41a) and (41b) are again cancelled by that from the four-string interaction (41c) at this stage. In consequence the amplitude becomes the well-known form:

$$\begin{aligned}\mathcal{A}_{FBFB} &= \mathcal{A}^{(s)}_{FBFB} + \mathcal{A}^{(t)}_{FBFB} + \mathcal{A}^{(4)}_{FBFB}\\ &= -\tfrac{1}{2}\int_0^\infty d\tau\big(\langle Q\Xi_A Q\Phi_B(\xi_c b_c)\eta\Psi_C\eta\Phi_D\rangle_W + \langle\eta\Psi_A Q\Phi_B(\xi_c b_c)Q\Xi_C\eta\Phi_D\rangle_W\\ &\quad + \langle Q\Phi_B\eta\Psi_C(\xi_c b_c)\eta\Phi_D Q\Xi_A\rangle_W + \langle Q\Phi_B Q\Xi_C(\xi_c b_c)\eta\Phi_D\eta\Psi_A\rangle_W\big)\\ &= -\int_0^\infty d\tau\big(\langle\eta\Psi_A Q\Phi_B(\xi_c b_c)\eta\Psi_C\eta\Phi_D\rangle_W + \langle Q\Phi_B\eta\Psi_C(\xi_c b_c)\eta\Phi_D\eta\Psi_A\rangle_W\big),\\ &= -\int_0^1 d\alpha\left\langle\xi_0\left(\int d^2z\mu_\alpha(z,\bar z)b(z)\right)V_A^{\left(-\frac{1}{2}\right)}(-\alpha^{-1})V_B^{(0)}(-\alpha)V_C^{\left(-\frac{1}{2}\right)}(\alpha)V_D^{(-1)}(\alpha^{-1})\right\rangle_{UHP}.\end{aligned} \tag{42}$$

In this way the new Feynman rules also give the same on-shell four-point amplitudes as those obtained by the self-dual rules.

In general, one can see that the two sets of rules give different results in the contribution from the diagram with either (i) at least two fermion propagators or (ii) two-fermion–even-boson interaction at least one of whose fermions is connected to the propagator. The difference in case (i) comes from the form of the fermion propagators. If the diagram has two fermion propagators, the self-dual rule using the propagator (26) gives a contribution of the form

$$\mathcal{A} \sim \langle\cdots(Q\Pi_R\eta + \eta\Pi_R Q)\cdots(Q\Pi_R\eta + \eta\Pi_R Q)\cdots\rangle_W. \tag{43}$$

If we follow the new Feynman rules, on the other hand, the contribution of the same diagram becomes

$$\mathcal{A} \sim \langle\cdots Q\Pi_R\eta\cdots Q\Pi_R\eta\cdots\rangle_W + \langle\cdots\eta\Pi_R Q\cdots\eta\Pi_R Q\cdots\rangle_W, \tag{44}$$

Downloaded from http://ptep.oxfordjournals.org/ at Library of Research Reactor Institute, Kyoto University on October 21, 2015

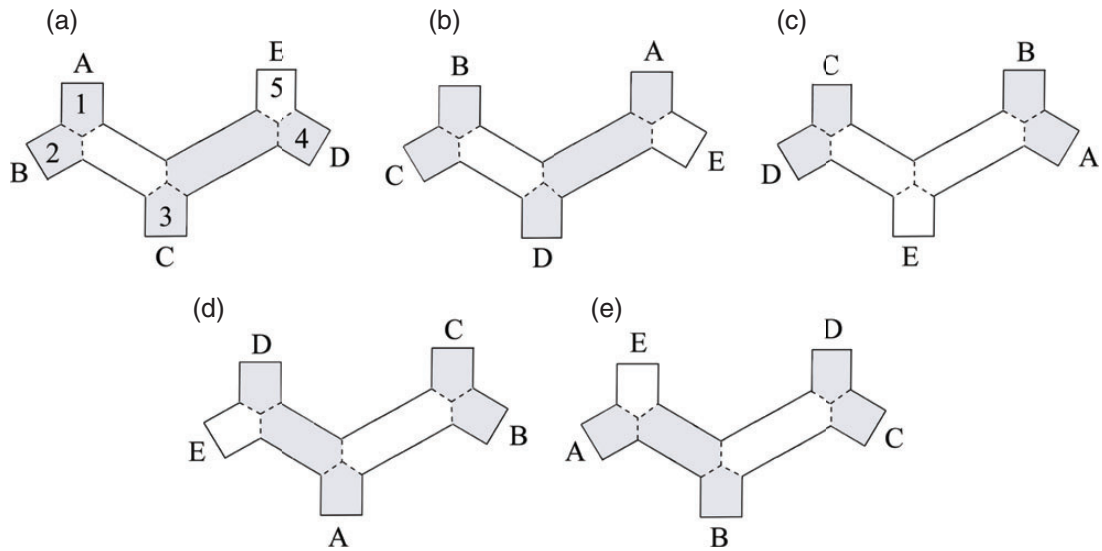

Fig. 5. Five 2P Feynman diagrams for four-fermion–one-boson amplitude.

using the fermion interactions,

$$S_R^{(n+2)} = -\tfrac{1}{2}\sum_{m=0}^{n}\frac{(-1)^m}{(n-m)!m!}\big\langle(Q\Xi)\Phi^{n-m}(\eta\Psi)\Phi^m\big\rangle, \tag{45}$$

and the (off-diagonal) R propagator (23).[6] In case (ii), the difference is due to the fact that (45) can be rewritten as

$$S_R^{(n+2)} = -\tfrac{1}{4}\sum_{m=0}^{n}\frac{(-1)^m}{(n-m)!m!}\big(\big\langle(Q\Xi)\Phi^{n-m}(\eta\Psi)\Phi^m\big\rangle - (-1)^n\big\langle(\eta\Psi)\Phi^{n-m}(Q\Xi)\Phi^m\big\rangle\big). \tag{46}$$

Therefore, the two-fermion–even-boson vertices for the self-dual rules vanish, as previously mentioned. In the new Feynman rules, in contrast, the two-fermion–even-boson interactions can contribute if at least one of the two fermions is connected to the propagator. We will next show that these differences in fact improve the discrepancy in the five-point amplitudes.

3.2. *Five-point amplitudes with external fermions*

Then we calculate the on-shell five-point amplitudes with external fermions. We follow the convention above; i.e., we label the five external strings by A, B, C, D, and E, and omit to explicitly indicate the numbers, depicted in Figs. 5(a), 7(a), and 10, by arranging the external states in order of these numbers from the left.

3.2.1. *Four-fermion–one-boson amplitude*

Let us begin with the calculation of the four-fermion–one-boson amplitude. The dominant contributions come from the diagrams containing three three-string vertices and two propagators, which we call in this paper the two-propagator (2P) diagrams. There are five different channels for color-ordered amplitudes as in Fig. 5.

[6] Similarly, it is easy to see that the two rules give the same contributions if the diagram has only one R propagator.

Downloaded from http://ptep.oxfordjournals.org/ at Library of Research Reactor Institute, Kyoto University on October 21, 2015

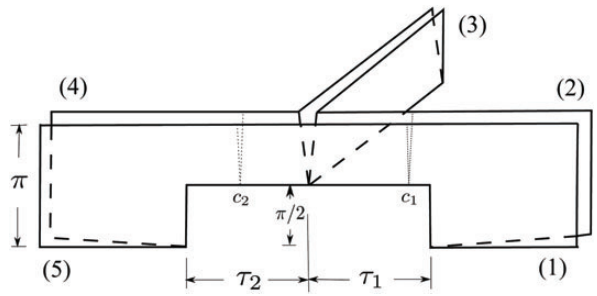

Fig. 6. The Witten diagram for five-point amplitudes. Each of the five legs, to which the numbers from (1) to (5) are assigned, should be read as semi-infinite strips.

The contribution from the first diagram, Fig. 5(a), is given by

$$\begin{aligned}\mathcal{A}^{(2\mathrm{P})(a)}_{FFFFB} = &-\left(\tfrac{1}{2}\right)^3\cdot(-2)\int_0^\infty d\tau_1\int_0^\infty d\tau_2\\ &\times\Big(\big\langle\big(Q\Xi_A\eta\Psi_B+\eta\Psi_A Q\Xi_B\big)\big(\xi_{c_1}b_{c_1}\big)Q\Xi_C(\eta\xi_{c_2}b_{c_2}Q)\eta\Psi_D\Phi_E\big\rangle_W\\ &+\big\langle\big(Q\Xi_A\eta\Psi_B+\eta\Psi_A Q\Xi_B\big)\big(\xi_{c_1}b_{c_1}\big)\eta\Psi_C(Q\xi_{c_2}b_{c_2}\eta)Q\Xi_D\Phi_E\big)\big\rangle_W\Big),\end{aligned}\tag{47}$$

where the correlation is evaluated as the conformal field theory on the Witten diagram depicted in Fig. 6. (ξ_{c_1}, b_{c_1}) and (ξ_{c_2}, b_{c_2}) denote the corresponding fields integrated along the paths c_1 and c_2, respectively.

Under the on-shell conditions, all the Q and η can be moved so as to act on the external states (without exchanging the order of ξ and Q):

$$\begin{aligned}\mathcal{A}^{(2\mathrm{P})(a)}_{FFFFB} = &-\tfrac{1}{4}\int_0^\infty d^2\tau\Big(\big\langle\big(Q\Xi_A\eta\Psi_B+\eta\Psi_A Q\Xi_B\big)\big(\xi_{c_1}b_{c_1}\big)Q\Xi_C b_{c_2}\eta\Psi_D Q\Phi_E\big\rangle_W\\ &+\big\langle\big(Q\Xi_A\eta\Psi_B+\eta\Psi_A Q\Xi_B\big)\big(\xi_{c_1}b_{c_1}\big)\eta\Psi_C b_{c_2}Q\Xi_D Q\Phi_E\big\rangle_W\Big)\\ &-\tfrac{1}{4}\int_0^\infty d\tau\Big(\big\langle\big(Q\Xi_A\eta\Psi_B+\eta\Psi_A Q\Xi_B\big)\big(\xi_c b_c\big)\eta\Psi_C Q\Xi_D\Phi_E\big\rangle_W\\ &+\big\langle Q\Xi_D\Phi_E\big(\xi_c b_c\big)\big(Q\Xi_A\eta\Psi_B+\eta\Psi_A Q\Xi_B\big)\eta\Psi_C\big\rangle_W\Big),\end{aligned}\tag{48a}$$

where we used a shorthand notation

$$\int_0^\infty d^2\tau \equiv \int_0^\infty d\tau_1\int_0^\infty d\tau_2.$$

The extra terms with less (one) propagator were produced from the boundary at $\tau_1 = 0$ or $\tau_2 = 0$ through the relation (36) by exchanging the order of the b_{c_i} and Q. The contributions from the other four channels depicted in Figs. 5(b)–(e) can similarly be evaluated as

$$\begin{aligned}\mathcal{A}^{(2\mathrm{P})(b)}_{FFFFB} = &-\tfrac{1}{4}\int_0^\infty d^2\tau\big\langle\big(Q\Xi_B\eta\Psi_C+\eta\Psi_B Q\Xi_C\big)\big(\xi_{c_1}b_{c_1}\big)\\ &\times\big(Q\Xi_D b_{c_2}Q\Phi_E\eta\Psi_A+\eta\Psi_D b_{c_2}Q\Phi_E Q\Xi_A\big)\big\rangle_W\\ &+\tfrac{1}{4}\int_0^\infty d\tau\Big(\big\langle\big(Q\Xi_B\eta\Psi_C+\eta\Psi_B Q\Xi_C\big)\big(\xi_c b_c\big)\eta\Psi_D\Phi_E Q\Xi_A\big\rangle_W\\ &+\big\langle\Phi_E Q\Xi_A\big(\xi_c b_c\big)\big(Q\Xi_B\eta\Psi_C+\eta\Psi_B Q\Xi_C\big)\eta\Psi_D\big\rangle_W\Big),\end{aligned}\tag{48b}$$

Downloaded from http://ptep.oxfordjournals.org/ at Library of Research Reactor Institute, Kyoto University on October 21, 2015

$$\begin{aligned}
\mathcal{A}^{(2\mathrm{P})(c)}_{FFFFB} = &-\tfrac{1}{4}\int_0^\infty d^2\tau\big\langle\big(Q\Xi_C\eta\Psi_D+\eta\Psi_C Q\Xi_D\big)\\
&\times\big(\xi_{c_1}b_{c_1}\big)Q\Phi_E b_{c_2}\big(Q\Xi_A\eta\Psi_B+\eta\Psi_A Q\Xi_B\big)\big\rangle_W\\
&-\tfrac{1}{8}\int_0^\infty d\tau\big(\big\langle\big(Q\Xi_C\eta\Psi_D+\eta\Psi_C Q\Xi_D\big)\\
&\times\big(\xi_c b_c\big)\Phi_E\big(Q\Xi_A\eta\Psi_B+\eta\Psi_A Q\Xi_B\big)\big\rangle_W-\big\langle\big(Q\Xi_A\eta\Psi_B+\eta\Psi_A Q\Xi_B\big)\\
&\times\big(\xi_c b_c\big)\big(Q\Xi_C\eta\Psi_D+\eta\Psi_C Q\Xi_D\big)\Phi_E\big\rangle_W\big),
\end{aligned}\tag{48c}$$

$$\begin{aligned}
\mathcal{A}^{(2\mathrm{P})(d)}_{FFFFB} = &-\tfrac{1}{4}\int_0^\infty d^2\tau\big(\big\langle\big(\eta\Psi_D\Phi_E\big(\xi_{c_1}b_{c_1}\big)Q\Xi_A b_{c_2}\big(Q\Xi_B\eta\Psi_C+\eta\Psi_B Q\Xi_C\big)\big\rangle_W\\
&+\big\langle Q\Xi_D\Phi_E\big(\xi_{c_1}b_{c_1}\big)\eta\Psi_A b_{c_2}\big(Q\Xi_B\eta\Psi_C+\eta\Psi_B Q\Xi_C\big)\big\rangle_W\big)\\
&+\tfrac{1}{4}\int_0^\infty d\tau\big(\big\langle Q\Xi_D\Phi_E\big(\xi_c b_c\big)\eta\Psi_A\big(Q\Xi_B\eta\Psi_C+\eta\Psi_B Q\Xi_C\big)\big\rangle_W\\
&-\big\langle\big(Q\Xi_B\eta\Psi_C+\eta\Psi_B Q\Xi_C\big)\big(\xi_c b_c\big)Q\Xi_D\Phi_E\eta\Psi_A\big\rangle_W\big),
\end{aligned}\tag{48d}$$

$$\begin{aligned}
\mathcal{A}^{(2\mathrm{P})(e)}_{FFFFB} = &-\tfrac{1}{4}\int_0^\infty d^2\tau\big(\big\langle Q\Phi_E Q\Xi_A\big(\xi_{c_1}b_{c_1}\big)\eta\Psi_B b_{c_2}\big(Q\Xi_C\eta\Psi_D+\eta\Psi_C Q\Xi_D\big)\big\rangle_W\\
&+\big\langle Q\Phi_E\eta\Psi_A\big(\xi_{c_1}b_{c_1}\big)Q\Xi_B b_{c_2}\big(Q\Xi_C\eta\Psi_D+\eta\Psi_C Q\Xi_D\big)\big\rangle_W\big)\\
&-\tfrac{1}{4}\int_0^\infty d\tau\big(\big\langle\Phi_E Q\Xi_A\big(\xi_c b_c\big)\eta\Psi_B\big(Q\Xi_C\eta\Psi_D+\eta\Psi_C Q\Xi_D\big)\big\rangle_W\\
&-\big\langle\big(Q\Xi_C\eta\Psi_D+\eta\Psi_C Q\Xi_D\big)\big(\xi_c b_c\big)\Phi_E Q\Xi_A\eta\Psi_B\big\rangle_W\big).
\end{aligned}\tag{48e}$$

Here the sum of the extra contributions with less propagator becomes

$$\begin{aligned}
\sum_{i=a}^{e}\mathcal{A}^{(2\mathrm{P})(i)}_{FFFFB}\big|_{\mathrm{extra}} = &\tfrac{1}{8}\int_0^\infty d\tau\big(\big\langle\big(Q\Xi_A\eta\Psi_B+\eta\Psi_A Q\Xi_B\big)\\
&\times\big(\xi_c b_c\big)\big(Q\Xi_C\eta\Psi_D-\eta\Psi_C Q\Xi_D\big)\Phi_E\big\rangle_W\\
&-2\big\langle\big(Q\Xi_B\eta\Psi_C+\eta\Psi_B Q\Xi_C\big)\\
&\times\big(\xi_c b_c\big)\big(Q\Xi_D\Phi_E\eta\Psi_A-\eta\Psi_D\Phi_E Q\Xi_A\big)\big\rangle_W\\
&+\big\langle\big(Q\Xi_C\eta\Psi_D+\eta\Psi_C Q\Xi_D\big)\\
&\times\big(\xi_c b_c\big)\Phi_E\big(Q\Xi_A\eta\Psi_B-\eta\Psi_A Q\Xi_B\big)\big\rangle_W\\
&-2\big\langle Q\Xi_D\Phi_E\big(\xi_c b_c\big)\big(Q\Xi_A\eta\Psi_B\eta\Psi_C-\eta\Psi_A\eta\Psi_B Q\Xi_C\big)\big\rangle_W\\
&+2\big\langle\Phi_E Q\Xi_A\big(\xi_c b_c\big)\big(Q\Xi_B\eta\Psi_C\eta\Psi_D-\eta\Psi_B\eta\Psi_C Q\Xi_D\big)\big\rangle_W\big),
\end{aligned}\tag{49}$$

which has the identical structure to the contributions from the diagrams which we will consider next. This extra contribution (49) vanishes under the constraint, but we keep them for a while.

The second contributions come from the diagrams called in this paper the one-propagator (1P) diagrams. These diagrams are constructed by using one three-string vertex, one four-string vertex and one propagator. In this case, we can draw the three 1P diagrams as depicted in Fig. 7. Their

Downloaded from http://ptep.oxfordjournals.org/ at Library of Research Reactor Institute, Kyoto University on October 21, 2015

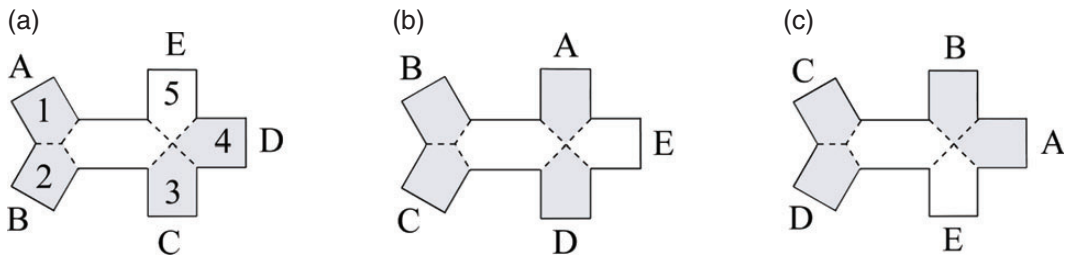

Fig. 7. Three 1P Feynman diagrams for four-fermion–one-boson amplitude.

contributions become

$$\mathcal{A}^{(1\mathrm{P})(a)}_{FFFFB} = -\tfrac{1}{8}\int_0^\infty d\tau\big\langle\big(Q\Xi_A\eta\Psi_B + \eta\Psi_A Q\Xi_B\big)\big(\xi_c b_c\big)\big(Q\Xi_C\eta\Psi_D - \eta\Psi_C Q\Xi_D\big)\Phi_E\big\rangle_W, \tag{50a}$$

$$\mathcal{A}^{(1\mathrm{P})(b)}_{FFFFB} = \tfrac{1}{4}\int_0^\infty d\tau\big\langle\big(Q\Xi_B\eta\Psi_C + \eta\Psi_B Q\Xi_C\big)\big(\xi_c b_c\big)\big(Q\Xi_D\Phi_E\eta\Psi_A - \eta\Psi_D\Phi_E Q\Xi_A\big)\big\rangle_W, \tag{50b}$$

$$\mathcal{A}^{(1\mathrm{P})(c)}_{FFFFB} = -\tfrac{1}{8}\int_0^\infty d\tau\big\langle\big(Q\Xi_C\eta\Psi_D + \eta\Psi_C Q\Xi_D\big)\big(\xi_c b_c\big)\Phi_E\big(Q\Xi_A\eta\Psi_B - \eta\Psi_A Q\Xi_B\big)\big\rangle_W, \tag{50c}$$

each of which cancels the first three terms in (49), respectively. Its last two terms, however, remain without being cancelled, and vanish by imposing the constraint. After eliminating the Ξ from the external on-shell fermions by the constraint, the total amplitude finally becomes

$$\begin{aligned}\mathcal{A}_{FFFFB} &= \sum_{i=a}^{e}\mathcal{A}^{(2\mathrm{P})(i)}_{FFFFB} + \sum_{i=a}^{c}\mathcal{A}^{(1\mathrm{P})(i)}_{FFFFB}\\ &= -\int_0^\infty d^2\tau\Big(\big\langle\eta\Psi_A\eta\Psi_B\big(\xi_{c_1}b_{c_1}\big)\eta\Psi_C b_{c_2}\eta\Psi_D Q\Phi_E\big\rangle_W\\ &\quad+\big\langle\eta\Psi_B\eta\Psi_C\big(\xi_{c_1}b_{c_1}\big)\eta\Psi_D b_{c_2}Q\Phi_E\eta\Psi_A\big\rangle_W + \big\langle\eta\Psi_C\eta\Psi_D\big(\xi_{c_1}b_{c_1}\big)Q\Phi_E b_{c_2}\eta\Psi_A\eta\Psi_B\big\rangle_W\\ &\quad+\big\langle\eta\Psi_D Q\Phi_E\big(\xi_{c_1}b_{c_1}\big)\eta\Psi_A b_{c_2}\eta\Psi_B\eta\Psi_C\big\rangle_W + \big\langle Q\Phi_E\eta\Psi_A\big(\xi_{c_1}b_{c_1}\big)\eta\Psi_B b_{c_2}\eta\Psi_C\eta\Psi_D\big\rangle_W\Big).\end{aligned} \tag{51}$$

This result has the same form as the five-point amplitude in the bosonic cubic string field theory (CSFT) [1] if we identify the $\eta\Psi$ and $Q\Phi$ with the bosonic string fields, both of which have the same ghost number, $G = 1$. If we recall the fact that the CSFT reproduces the bosonic string amplitudes [3], we can conclude that (51) is equivalent to the correct superstring amplitude. If necessary, we can map the expression to the conventional form evaluated on the upper half-plane by the same conformal mapping as that to be used in the CSFT.

3.2.2. Two-fermion–three-boson amplitude with ordering FFBBB

Now we are ready to calculate the two-fermion–three-boson amplitudes, for which the self-dual Feynman rules do not give the correct results [10,11]. Let us first consider the one with ordering *FFBBB*, whose dominant part comes from the 2P diagrams depicted in Fig. 8. Here, Fig. 8(b), in particular, includes two fermion propagators, that is, satisfies condition (i) mentioned at the end of Sect. 3.1. The contribution from this diagram is in fact different from that obtained by the self-dual rules (even under the constraint) and improves the amplitude. Including this, the contribution of each 2P diagram

Downloaded from http://ptep.oxfordjournals.org/ at Library of Research Reactor Institute, Kyoto University on October 21, 2015

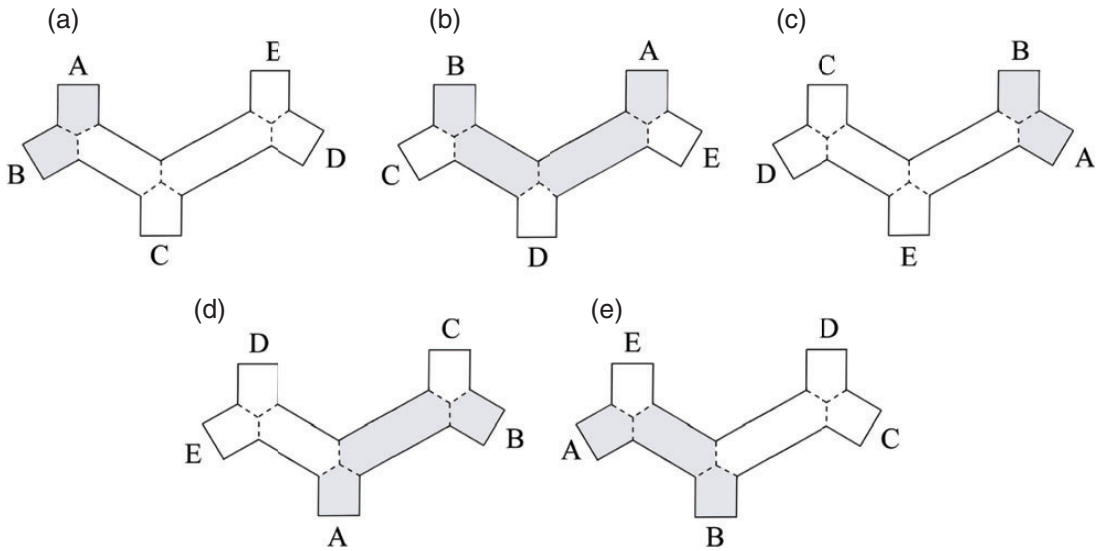

Fig. 8. Five 2P Feynman diagrams for two-fermion–three-boson amplitude with ordering *FFBBB*.

in this case becomes

$$
\begin{aligned}
\mathcal{A}^{(2\mathrm{P})(a)}_{FFBBB} = {} & \tfrac{1}{2}\int_0^\infty d^2\tau \big\langle \big(Q\Xi_A\eta\Psi_B + \eta\Psi_A Q\Xi_B\big)\big(\xi_{c_1}b_{c_1}\big)Q\Phi_C b_{c_2}Q\Phi_D\eta\Phi_E\big\rangle_W \\
& + \tfrac{1}{8}\int_0^\infty d\tau\Big(\big\langle\big(Q\Xi_A\eta\Psi_B + \eta\Psi_A Q\Xi_B\big) \\
& \times \big(\xi_c b_c\big)\Phi_C\big(Q\Phi_D\eta\Phi_E + \eta\Phi_D Q\Phi_E\big)\big\rangle_W \\
& - 2\big\langle\big(Q\Xi_A\eta\Psi_B + \eta\Psi_A Q\Xi_B\big)\big(\xi_c b_c\big)Q\Phi_C\eta(\Phi_D\Phi_E)\big\rangle_W \\
& - \big\langle\big(Q\Phi_D\eta\Phi_E + \eta\Phi_D Q\Phi_E\big)\big(\xi_c b_c\big)\big(Q\Xi_A\eta\Psi_B + \eta\Psi_A Q\Xi_B\big)\Phi_C\big\rangle_W \\
& - 2\big\langle\eta(\Phi_D\Phi_E)\big(\xi_c b_c\big)\big(Q\Xi_A\eta\Psi_B + \eta\Psi_A Q\Xi_B\big)Q\Phi_C\big\rangle_W\Big),
\end{aligned}
\tag{52a}
$$

$$
\begin{aligned}
\mathcal{A}^{(2\mathrm{P})(b)}_{FFBBB} = {} & \tfrac{1}{2}\int_0^\infty d^2\tau\Big(\big\langle\eta\Psi_B Q\Phi_C\big(\xi_{c_1}b_{c_1}\big)Q\Phi_D b_{c_2}\eta\Phi_E Q\Xi_A\big\rangle_W \\
& + \big\langle Q\Xi_B Q\Phi_C\big(\xi_{c_1}b_{c_1}\big)Q\Phi_D b_{c_2}\eta\Phi_E\eta\Psi_A\big\rangle_W\Big) \\
& - \tfrac{1}{2}\int_0^\infty d\tau\Big(\big\langle Q\Xi_B\Phi_C\big(\xi_c b_c\big)\eta\Phi_D Q\Phi_E\eta\Psi_A\big\rangle_W \\
& - \big\langle Q\Xi_B Q\Phi_C\big(\xi_c b_c\big)\eta(\Phi_D\Phi_E)\eta\Psi_A\big\rangle_W \\
& - \big\langle Q\Phi_E\eta\Psi_A\big(\xi_c b_c\big)Q\Xi_B\eta(\Phi_C\Phi_D)\big\rangle_W + \big\langle\eta\Phi_E Q\Xi_A\big(\xi_c b_c\big)\eta\Psi_B Q\Phi_C\Phi_D\big\rangle_W \\
& + \big\langle\eta\Phi_E\eta\Psi_A\big(\xi_c b_c\big)Q\Xi_B Q\Phi_C\Phi_D\big\rangle_W \\
& - \big\langle\Phi_E\eta\Psi_A\big(\xi_c b_c\big)Q\Xi_B Q\Phi_C\eta\Phi_D\big\rangle_W\Big),
\end{aligned}
\tag{52b}
$$

$$
\begin{aligned}
\mathcal{A}^{(2\mathrm{P})(c)}_{FFBBB} = {} & \tfrac{1}{2}\int_0^\infty d^2\tau\big\langle Q\Phi_C Q\Phi_D\big(\xi_{c_1}b_{c_1}\big)\eta\Phi_E b_{c_2}\big(Q\Xi_A\eta\Psi_B + \eta\Psi_A Q\Xi_B\big)\big\rangle_W \\
& + \tfrac{1}{8}\int_0^\infty d\tau\Big(2\big\langle\Phi_C Q\Phi_D\big(\xi_c b_c\big)\eta\Phi_E\big(Q\Xi_A\eta\Psi_B + \eta\Psi_A Q\Xi_B\big)\big\rangle_W
\end{aligned}
$$

Downloaded from http://ptep.oxfordjournals.org/ at Library of Research Reactor Institute, Kyoto University on October 21, 2015

$$
\begin{aligned}
&+\big\langle\big(Q\Phi_C\eta\Phi_D-\eta\Phi_C Q\Phi_D\big)\big(\xi_c b_c\big)\Phi_E\big(Q\Xi_A\eta\Psi_B+\eta\Psi_A Q\Xi_B\big)\big\rangle_W\\
&-2\big\langle Q\Phi_C\eta\Phi_D\big(\xi_c b_c\big)\Phi_E\big(Q\Xi_A\eta\Psi_B+\eta\Psi_A Q\Xi_B\big)\big\rangle_W\\
&-2\big\langle Q\Phi_C\Phi_D\big(\xi_c b_c\big)\eta\Phi_E\big(Q\Xi_A\eta\Psi_B+\eta\Psi_A Q\Xi_B\big)\big\rangle_W\\
&-2\big\langle\big(Q\Xi_A\eta\Psi_B+\eta\Psi_A Q\Xi_B\big)\big(\xi_c b_c\big)\Phi_C Q\Phi_D\eta\Phi_E\big\rangle_W\\
&-\big\langle\big(Q\Xi_A\eta\Psi_B+\eta\Psi_A Q\Xi_B\big)\big(\xi_c b_c\big)\big(Q\Phi_C\eta\Phi_D-\eta\Phi_C Q\Phi_D\big)\Phi_E\big\rangle_W\\
&+2\big\langle\big(Q\Xi_A\eta\Psi_B+\eta\Psi_A Q\Xi_B\big)\big(\xi_c b_c\big)Q\Phi_C\eta(\Phi_D\Phi_E)\big\rangle_W\Big),
\end{aligned}
\tag{52c}
$$

$$
\begin{aligned}
\mathcal{A}^{(2\mathrm{P})(d)}_{FFBBB}=&\ \tfrac{1}{2}\int_0^\infty d^2\tau\big\langle Q\Phi_D\eta\Phi_E\big(\xi_{c_1}b_{c_1}\big)\big(Q\Xi_A b_{c_2}\eta\Psi_B+\eta\Psi_A b_{c_2}Q\Xi_B\big)Q\Phi_C\big\rangle_W\\
&+\tfrac{1}{4}\int_0^\infty d\tau\Big(\big\langle\big(Q\Phi_D\eta\Phi_E+\eta\Phi_D Q\Phi_E\big)\big(\xi_c b_c\big)\eta\Psi_A Q\Xi_B\Phi_C\big\rangle_W\\
&+\big\langle\eta(\Phi_D\Phi_E)\big(\xi_c b_c\big)\big(Q\Xi_A\eta\Psi_B+\eta\Psi_A Q\Xi_B\big)Q\Phi_C\big\rangle_W\\
&+\big\langle Q\Xi_B\Phi_C\big(\xi_c b_c\big)\big(Q\Phi_D\eta\Phi_E+\eta\Phi_D Q\Phi_E\big)\eta\Psi_A\big\rangle_W\\
&-\big\langle Q\Xi_B Q\Phi_C\big(\xi_c b_c\big)\eta(\Phi_D\Phi_E)\eta\Psi_A\big\rangle_W\\
&-\big\langle\eta\Psi_B Q\Phi_C\big(\xi_c b_c\big)\eta(\Phi_D\Phi_E)Q\Xi_A\big\rangle_W\Big),
\end{aligned}
\tag{52d}
$$

$$
\begin{aligned}
\mathcal{A}^{(2\mathrm{P})(e)}_{FFBBB}=&\ \tfrac{1}{2}\int_0^\infty d^2\tau\Big(\big\langle\eta\Phi_E Q\Xi_A\big(\xi_{c_1}b_{c_1}\big)\eta\Psi_B b_{c_2}Q\Phi_C Q\Phi_D\big\rangle_W\\
&+\big\langle\eta\Phi_E\eta\Psi_A\big(\xi_{c_1}b_{c_1}\big)Q\Xi_B b_{c_2}Q\Phi_C Q\Phi_D\big\rangle_W\Big)\\
&+\tfrac{1}{4}\int_0^\infty d\tau\Big(-\big\langle\Phi_E\eta\Psi_A\big(\xi_c b_c\big)Q\Xi_B\big(Q\Phi_C\eta\Phi_D+\eta\Phi_C Q\Phi_D\big)\big\rangle_W\\
&+\big\langle\eta\Phi_E Q\Xi_A\big(\xi_c b_c\big)\eta\Psi_B\big(Q\Phi_C\Phi_D-\Phi_C Q\Phi_D\big)\big\rangle_W\\
&+\big\langle\eta\Phi_E\eta\Psi_A\big(\xi_c b_c\big)Q\Xi_B\big(Q\Phi_C\Phi_D-\Phi_C Q\Phi_D\big)\big\rangle_W\\
&+\big\langle\big(Q\Phi_C\eta\Phi_D+\eta\Phi_C Q\Phi_D\big)\big(\xi_c b_c\big)\Phi_E\eta\Psi_A Q\Xi_B\big\rangle_W\\
&+\big\langle\big(Q\Phi_C\Phi_D-\Phi_C Q\Phi_D\big)\\
&\times\big(\xi_c b_c\big)\eta\Phi_E(Q\Xi_A\eta\Psi_B+\eta\Psi_A Q\Xi_B)\big\rangle_W\Big),
\end{aligned}
\tag{52e}
$$

after some calculations. We moved the Q and η so as to act on the external states, and then deformed the expression so that the external bosons have single forms, $Q\Phi_C$, $Q\Phi_D$, and $\eta\Phi_E$. The extra terms with less propagator appear as the result.

There are five different channels also in the 1P diagrams as in Fig. 9. The contribution from each diagram is similarly evaluated as

$$
\begin{aligned}
\mathcal{A}^{(1\mathrm{P})(a)}_{FFBBB}=&\ \frac{1}{24}\int_0^\infty d\tau\Big(\big\langle\big(Q\Xi_A\eta\Psi_B+\eta\Psi_A Q\Xi_B\big)\big(\xi_c b_c\big)\Phi_C\big(Q\Phi_D\eta\Phi_E-\eta\Phi_D Q\Phi_E\big)\big\rangle_W\\
&-2\big\langle\big(Q\Xi_A\eta\Psi_B+\eta\Psi_A Q\Xi_B\big)\big(\xi_c b_c\big)\big(Q\Phi_C\Phi_D\eta\Phi_E-\eta\Phi_C\Phi_D Q\Phi_E\big)\big\rangle_W\\
&+\big\langle\big(Q\Xi_A\eta\Psi_B+\eta\Psi_A Q\Xi_B\big)\big(\xi_c b_c\big)\big(Q\Phi_C\eta\Phi_D-\eta\Phi_C Q\Phi_D\big)\Phi_E\big\rangle_W\Big),
\end{aligned}
\tag{53a}
$$

$$
\begin{aligned}
\mathcal{A}^{(1\mathrm{P})(b)}_{FFBBB}=&\ \tfrac{1}{4}\int_0^\infty d\tau\Big(\big\langle\eta\Psi_B\eta\Phi_C\big(\xi_c b_c\big)Q(\Phi_D\Phi_E)Q\Xi_A\big\rangle_W\\
&-\big\langle Q\Xi_B\eta\Phi_C\big(\xi_c b_c\big)Q(\Phi_D\Phi_E)\eta\Psi_A\big\rangle_W
\end{aligned}
$$

Downloaded from http://ptep.oxfordjournals.org/ at Library of Research Reactor Institute, Kyoto University on October 21, 2015

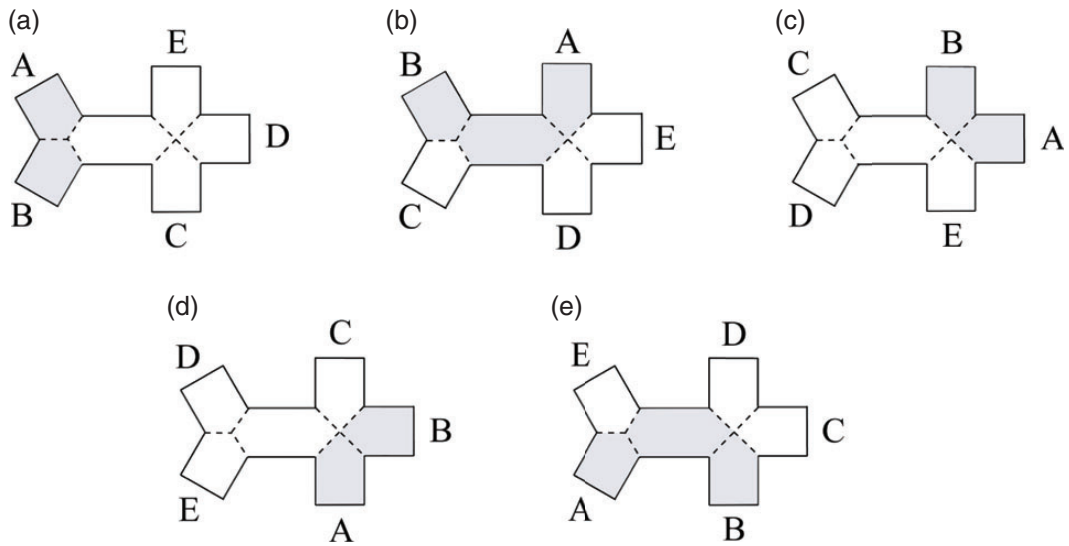

Fig. 9. Five 1P Feynman diagrams for two-fermion–three-boson amplitude with ordering *FFBBB*.

$$
\begin{aligned}
&- \langle \eta\Psi_B \Phi_C (\xi_c b_c)(Q\Phi_D \eta\Phi_E - \eta\Phi_D Q\Phi_E) Q\Xi_A \rangle_W \Big) \\
&- \tfrac{1}{4}\langle Q\Xi_A \eta\Psi_B \Phi_C \Phi_D \Phi_E \rangle_W, \qquad (53b)
\end{aligned}
$$

$$
\mathcal{A}^{(1\mathrm{P})(c)}_{FFBBB} = \frac{1}{8}\int_0^\infty d\tau \langle (Q\Phi_C \eta\Phi_D + \eta\Phi_C Q\Phi_D)(\xi_c b_c)\Phi_E (Q\Xi_A \eta\Psi_B - \eta\Psi_A Q\Xi_B)\rangle_W, \qquad (53c)
$$

$$
\mathcal{A}^{(1\mathrm{P})(d)}_{FFBBB} = \frac{1}{8}\int_0^\infty d\tau \langle (Q\Phi_D \eta\Phi_E + \eta\Phi_D Q\Phi_E)(\xi_c b_c)(Q\Xi_A \eta\Psi_B - \eta\Psi_A Q\Xi_B)\Phi_C \rangle_W, \qquad (53d)
$$

$$
\begin{aligned}
\mathcal{A}^{(1\mathrm{P})(e)}_{FFBBB} = \frac{1}{4}\int_0^\infty d\tau \Big(&\langle \Phi_E \eta\Psi_A (\xi_c b_c) Q\Xi_B (Q\Phi_C \eta\Phi_D - \eta\Phi_C Q\Phi_D)\rangle_W \\
&+ \langle \eta\Phi_E (Q\Xi_A (\xi_c b_c)\eta\Psi_B - \eta\Psi_A (\xi_c b_c) Q\Xi_B) Q(\Phi_C \Phi_D)\rangle_W \Big) \\
&- \tfrac{1}{4}\langle \eta\Psi_A Q\Xi_B \Phi_C \Phi_D \Phi_E \rangle_W. \qquad (53e)
\end{aligned}
$$

Figures 9(b) and (e) satisfy condition (ii), and their contributions (53b) and (53e) are different from those obtained by the self-dual rules. These contributions (53) almost cancel the extra terms in (52), and give

$$
\sum_{i=a}^{e} \left(\mathcal{A}^{(2P)(i)}_{FFBBB}\right)\Big|_{\mathrm{extra}} + \sum_{i=a}^{e} \mathcal{A}^{(1P)(i)}_{FFBBB} = -\frac{1}{12}\langle (Q\Xi_A \eta\Psi_B + \eta\Psi_A Q\Xi_B)\Phi_C \Phi_D \Phi_E \rangle_W. \qquad (54)
$$

The nonzero result again comes from the boundary of the proper time integration through the relation (36).

We can further draw a diagram with no propagator (NP) using the five-string vertex, as in Fig. 10. The contribution of this diagram,

$$
\mathcal{A}^{(\mathrm{NP})}_{FFBBB} = \frac{1}{12}\langle (Q\Xi_A \eta\Psi_B + \eta\Psi_A Q\Xi_B)\Phi_C \Phi_D \Phi_E \rangle_W, \qquad (55)
$$

Downloaded from http://ptep.oxfordjournals.org/ at Library of Research Reactor Institute, Kyoto University on October 21, 2015

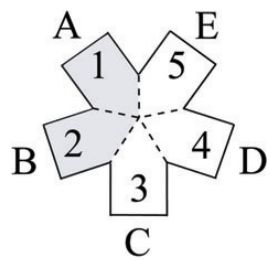

Fig. 10. The Feynman diagram with no propagator for two-fermion–three-boson amplitude with ordering *FFBBB*.

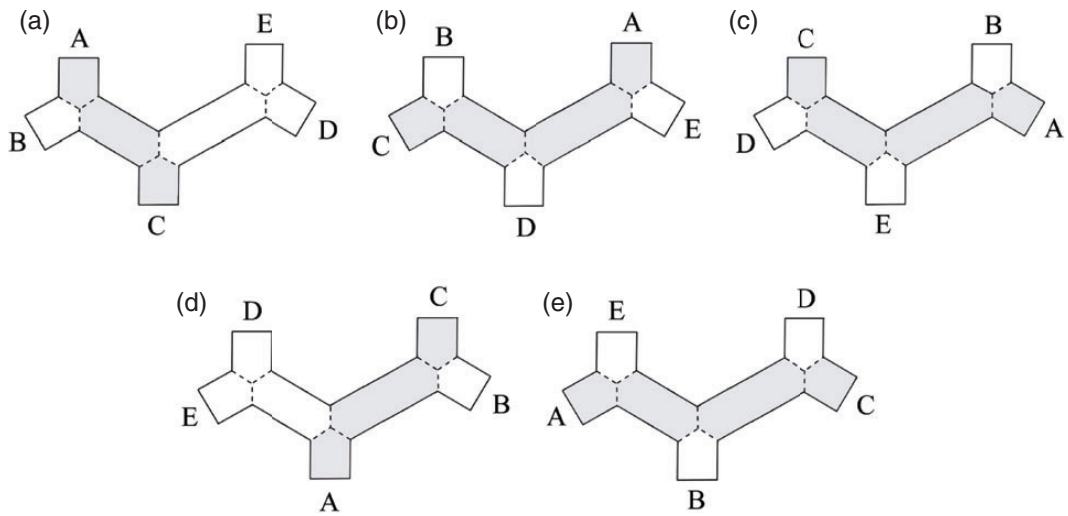

Fig. 11. Five 2P Feynman diagrams for two-fermion–three-boson amplitude with ordering *FBFBB*.

exactly cancels (54). The amplitude finally becomes

$$\begin{aligned}\mathcal{A}_{FFBBB} &= \sum_{i=a}^{e} \mathcal{A}^{(\mathrm{2P})(i)}_{FFBBB} + \sum_{i=a}^{e} \mathcal{A}^{(\mathrm{1P})(i)}_{FFBBB} + \mathcal{A}^{(\mathrm{NP})}_{FFBBB} \\ &= \int_0^\infty d^2\tau \Big(\big\langle \eta\Psi_A \eta\Psi_B \big(\xi_{c_1} b_{c_1}\big) Q\Phi_C b_{c_2} Q\Phi_D \eta\Phi_E \big\rangle_W \\ &\quad + \big\langle \eta\Psi_B Q\Phi_C \big(\xi_{c_1} b_{c_1}\big) Q\Phi_D b_{c_2} \eta\Phi_E \eta\Psi_A \big\rangle_W + \big\langle Q\Phi_C Q\Phi_D \big(\xi_{c_1} b_{c_1}\big) \eta\Phi_E b_{c_2} \eta\Psi_A \eta\Psi_B \big\rangle_W \\ &\quad + \big\langle Q\Phi_D \eta\Phi_E \big(\xi_{c_1} b_{c_1}\big) \eta\Psi_A b_{c_2} \eta\Psi_B Q\Phi_C \big\rangle_W + \big\langle \eta\Phi_E \eta\Psi_A \big(\xi_{c_1} b_{c_1}\big) \eta\Psi_B b_{c_2} Q\Phi_C Q\Phi_D \big\rangle_W \Big),\end{aligned} \tag{56}$$

after eliminating Ξ from the external fermions. This final expression is again equal to that obtained in the CSFT, so equivalent to the correct amplitude.

3.2.3. Two-fermion–three-boson amplitude with ordering FBFBB

Last is the two-fermion–three-boson amplitude with ordering *FBFBB*, for which we can draw the five 2P diagrams depicted in Fig. 11. The diagrams (b), (c), and (e) satisfying condition (i) can contribute to the amplitude differently from the case of the self-dual rules. Each diagram gives the

Downloaded from http://ptep.oxfordjournals.org/ at Library of Research Reactor Institute, Kyoto University on October 21, 2015

contribution

$$
\begin{aligned}
\mathcal{A}^{(2\mathrm{P})(a)}_{FBFBB} = {} & \tfrac{1}{2}\int_0^\infty d^2\tau\big(\big\langle Q\Xi_A Q\Phi_B\big(\xi_{c_1}b_{c_1}\big)\eta\Psi_C b_{c_2} Q\Phi_D\eta\Phi_E\big\rangle_W \\
& + \big\langle \eta\Psi_A Q\Phi_B\big(\xi_{c_1}b_{c_1}\big) Q\Xi_C b_{c_2} Q\Phi_D\eta\Phi_E\big\rangle_W\big) \\
& - \tfrac{1}{4}\int_0^\infty d\tau\big(\big\langle Q\Xi_A\Phi_B\big(\xi_c b_c\big)\eta\Psi_C\big(Q\Phi_D\eta\Phi_E + \eta\Phi_D Q\Phi_E\big)\big\rangle_W \\
& + \big\langle Q\Xi_A Q\Phi_B\big(\xi_c b_c\big)\eta\Psi_C\eta(\Phi_D\Phi_E)\big\rangle_W + \big\langle \eta\Psi_A Q\Phi_B\big(\xi_c b_c\big) Q\Xi_C\eta(\Phi_D\Phi_E)\big\rangle_W \\
& - \big\langle\big(Q\Phi_D\eta\Phi_E + \eta\Phi_D Q\Phi_E\big)\big(\xi_c b_c\big) Q\Xi_A\Phi_B\eta\Psi_C\big\rangle_W \\
& + \big\langle \eta(\Phi_D\Phi_E)\big(\xi_c b_c\big) Q\Xi_A Q\Phi_B\eta\Psi_C\big\rangle_W + \big\langle \eta(\Phi_D\Phi_E)\big(\xi_c b_c\big)\eta\Psi_A Q\Phi_B Q\Xi_C\big\rangle_W\big), \qquad (57a)
\end{aligned}
$$

$$
\begin{aligned}
\mathcal{A}^{(2\mathrm{P})(b)}_{FBFBB} = {} & \tfrac{1}{2}\int_0^\infty d^2\tau\big(\big\langle Q\Phi_B\eta\Psi_C\big(\xi_{c_1}b_{c_1}\big) Q\Phi_D b_{c_2}\eta\Phi_E Q\Xi_A\big\rangle_W \\
& + \big\langle Q\Phi_B Q\Xi_C\big(\xi_{c_1}b_{c_1}\big) Q\Phi_D b_{c_2}\eta\Phi_E\eta\Psi_A\big\rangle_W\big) \\
& + \tfrac{1}{2}\int_0^\infty d\tau\big(\big\langle \Phi_B Q\Xi_C\big(\xi_c b_c\big)\eta\Phi_D Q\Phi_E\eta\Psi_A\big\rangle_W \\
& + \big\langle Q\Phi_B Q\Xi_C\big(\xi_c b_c\big)\eta(\Phi_D\Phi_E)\eta\Psi_A\big\rangle_W + \big\langle Q\Phi_E\eta\Psi_A\big(\xi_c b_c\big)\eta\Phi_B Q\Xi_C\Phi_D\big\rangle_W \\
& - \big\langle Q\Phi_E\eta\Psi_A\big(\xi_c b_c\big)\Phi_B Q\Xi_C\eta\Phi_D\big\rangle_W - \big\langle \eta\Phi_E Q\Xi_A\big(\xi_c b_c\big) Q\Phi_B\eta\Psi_C\Phi_D\big\rangle_W \\
& - \big\langle \eta\Phi_E\eta\Psi_A\big(\xi_c b_c\big) Q\Phi_B Q\Xi_C\Phi_D\big\rangle_W + \big\langle \Phi_E\eta\Psi_A\big(\xi_c b_c\big) Q\Phi_B Q\Xi_C\eta\Phi_D\big\rangle_W\big), \qquad (57b)
\end{aligned}
$$

$$
\begin{aligned}
\mathcal{A}^{(2\mathrm{P})(c)}_{FBFBB} = {} & \tfrac{1}{2}\int_0^\infty d^2\tau\big(\big\langle \eta\Psi_C Q\Phi_D\big(\xi_{c_1}b_{c_1}\big)\eta\Phi_E b_{c_2} Q\Xi_A Q\Phi_B\big\rangle_W \\
& + \big\langle Q\Xi_C Q\Phi_D\big(\xi_{c_1}b_{c_1}\big)\eta\Phi_E b_{c_2}\eta\Psi_A Q\Phi_B\big\rangle_W\big) \\
& + \tfrac{1}{2}\int_0^\infty d\tau_1\big(\big\langle \eta\Psi_C Q\Phi_D\big(\xi_c b_c\big)\eta\Phi_E Q\Xi_A\Phi_B\big\rangle_W \\
& - \big\langle \eta\Psi_C Q\Phi_D\big(\xi_c b_c\big)\Phi_E Q\Xi_A\eta\Phi_B\big\rangle_W - \big\langle Q\Xi_C\Phi_D\big(\xi_c b_c\big)\eta\Phi_E\eta\Psi_A Q\Phi_B\big\rangle_W \\
& + \big\langle Q\Xi_A\Phi_B\big(\xi_c b_c\big)\eta\Psi_C Q\Phi_D\eta\Phi_E\big\rangle_W + \big\langle \eta\Psi_A Q\Phi_B\big(\xi_c b_c\big) Q\Xi_C\eta(\Phi_D\Phi_E)\big\rangle_W\big), \qquad (57c)
\end{aligned}
$$

$$
\begin{aligned}
\mathcal{A}^{(2\mathrm{P})(d)}_{FBFBB} = {} & \tfrac{1}{2}\int_0^\infty d^2\tau\big(\big\langle Q\Phi_D\eta\Phi_E\big(\xi_{c_1}b_{c_1}\big) Q\Xi_A b_{c_2} Q\Phi_B\eta\Psi_C\big\rangle_W \\
& + \big\langle Q\Phi_D\eta\Phi_E\big(\xi_{c_1}b_{c_1}\big)\eta\Psi_A b_{c_2} Q\Phi_B Q\Xi_C\big\rangle_W\big) \\
& + \tfrac{1}{4}\int_0^\infty d\tau\big(\big\langle \eta(\Phi_D\Phi_E)\big(\xi_c b_c\big) Q\Xi_A Q\Phi_B\eta\Psi_C\big\rangle_W \\
& + \big\langle \eta(\Phi_D\Phi_E)\big(\xi_c b_c\big)\eta\Psi_A Q\Phi_B Q\Xi_C\big\rangle_W \\
& - \big\langle\big(Q\Phi_D\eta\Phi_E + \eta\Phi_D Q\Phi_E\big)\big(\xi_c b_c\big)\eta\Psi_A\Phi_B Q\Xi_C\big\rangle_W \\
& - \big\langle Q\Phi_B\eta\Psi_C\big(\xi_c b_c\big)\eta(\Phi_D\Phi_E) Q\Xi_A\big\rangle_W - \big\langle Q\Phi_B Q\Xi_C\big(\xi_c b_c\big)\eta(\Phi_D\Phi_E)\eta\Psi_A\big\rangle_W \\
& - \big\langle \Phi_B Q\Xi_C\big(\xi_c b_c\big)\big(Q\Phi_D\eta\Phi_E + \eta\Phi_D Q\Phi_E\big)\eta\Psi_A\big\rangle_W\big), \qquad (57d)
\end{aligned}
$$

$$
\begin{aligned}
\mathcal{A}^{(2\mathrm{P})(e)}_{FBFBB} = {} & \tfrac{1}{2}\int_0^\infty d^2\tau\big(\big\langle \eta\Phi_E Q\Xi_A\big(\xi_{c_1}b_{c_1}\big) Q\Phi_B b_{c_2}\eta\Psi_C Q\Phi_D\big\rangle_W \\
& + \big\langle \eta\Phi_E\eta\Psi_A\big(\xi_{c_1}b_{c_1}\big) Q\Phi_B b_{c_2} Q\Xi_C Q\Phi_D\big\rangle_W\big) \\
& + \tfrac{1}{2}\int_0^\infty d\tau\big(\big\langle \eta\Phi_E Q\Xi_A\big(\xi_c b_c\big)\Phi_B\eta\Psi_C Q\Phi_D\big\rangle_W
\end{aligned}
$$

Downloaded from http://ptep.oxfordjournals.org/ at Library of Research Reactor Institute, Kyoto University on October 21, 2015

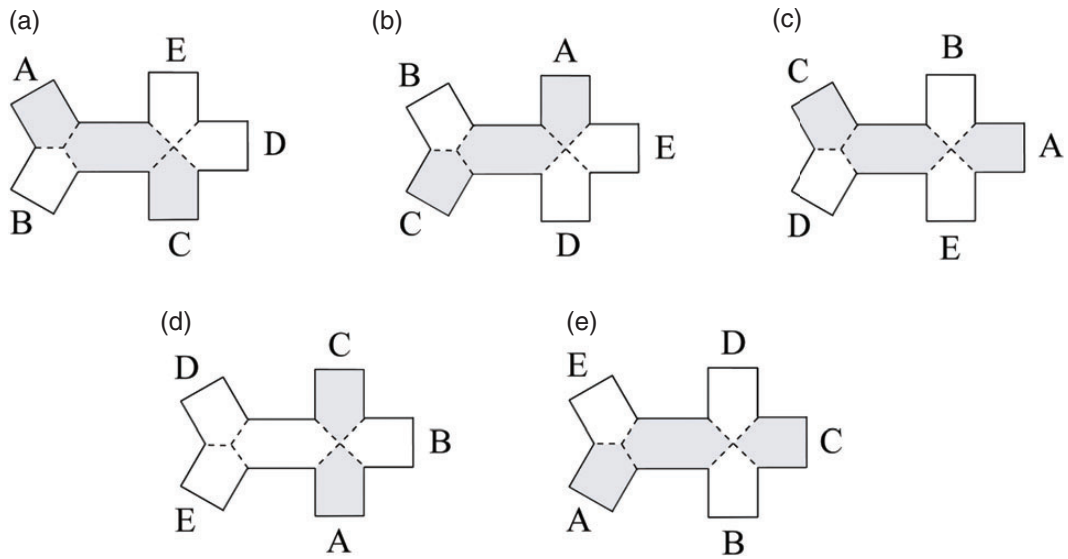

Fig. 12. Five 1P Feynman diagrams for two-fermion–three-boson amplitude with ordering *FBFBB*.

$$
\begin{aligned}
&+\langle \eta\Phi_E\eta\Psi_A(\xi_c b_c)Q\Phi_B Q\Xi_C\Phi_D\rangle_W - \langle \Phi_E\eta\Psi_A(\xi_c b_c)Q\Phi_B Q\Xi_C\eta\Phi_D\rangle_W \\
&-\langle Q\Xi_C\eta\Phi_D(\xi_c b_c)Q\Phi_E\eta\Psi_A\Phi_B\rangle_W + \langle Q\Xi_C\eta\Phi_D(\xi_c b_c)\Phi_E\eta\Psi_A Q\Phi_B\rangle_W \\
&+\langle Q\Xi_C\Phi_D(\xi_c b_c)\eta\Phi_E\eta\Psi_A Q\Phi_B\rangle_W\big),
\end{aligned} \tag{57e}
$$

to the amplitude, where the dominant parts are deformed so that the external bosons have single forms, $Q\Phi_B$, $Q\Phi_D$, and $\eta\Phi_E$. The contributions with less propagator almost cancel with those of the five 1P diagrams in Fig. 12:

$$
\begin{aligned}
\mathcal{A}^{(1\mathrm{P})(a)}_{FBFBB} &= \tfrac{1}{4}\int_0^\infty d\tau\big(\langle Q\Xi_A\eta\Phi_B(\xi_c b_c)\eta\Psi_C Q(\Phi_D\Phi_E)\rangle_W \\
&\quad -\langle \eta\Psi_A Q\Phi_B(\xi_c b_c)Q\Xi_C\eta(\Phi_D\Phi_E)\rangle_W\big),
\end{aligned} \tag{58a}
$$

$$
\begin{aligned}
\mathcal{A}^{(1\mathrm{P})(b)}_{FBFBB} &= \tfrac{1}{4}\int_0^\infty d\tau\big(\langle Q\Phi_B\eta\Psi_C(\xi_c b_c)\eta(\Phi_D\Phi_E)Q\Xi_A\rangle_W \\
&\quad -\langle \eta\Phi_B Q\Xi_C(\xi_c b_c)Q(\Phi_D\Phi_E)\eta\Psi_A\rangle_W\big),
\end{aligned} \tag{58b}
$$

$$
\begin{aligned}
\mathcal{A}^{(1\mathrm{P})(c)}_{FBFBB} &= \tfrac{1}{2}\int_0^\infty d\tau\big(\langle Q\Xi_C\eta\Phi_D(\xi_c b_c)Q\Phi_E\eta\Psi_A\Phi_B\rangle_W \\
&\quad -\langle Q\Xi_C\eta\Phi_D(\xi_c b_c)\Phi_E\eta\Psi_A Q\Phi_B\rangle_W - \langle \eta\Psi_C Q\Phi_D(\xi_c b_c)\eta\Phi_E Q\Xi_A\Phi_B\rangle_W \\
&\quad +\langle \eta\Psi_C Q\Phi_D(\xi_c b_c)\Phi_E Q\Xi_A\eta\Phi_B\rangle_W\big),
\end{aligned} \tag{58c}
$$

$$
\begin{aligned}
\mathcal{A}^{(1\mathrm{P})(d)}_{FBFBB} &= -\tfrac{1}{4}\int_0^\infty d\tau\big(\langle (Q\Phi_D\eta\Phi_E + \eta\Phi_D Q\Phi_E)(\xi_c b_c)Q\Xi_A\Phi_B\eta\Psi_C\rangle_W \\
&\quad -\langle (Q\Phi_D\eta\Phi_E + \eta\Phi_D Q\Phi_E)(\xi_c b_c)\eta\Psi_A\Phi_B Q\Xi_C\rangle_W\big),
\end{aligned} \tag{58d}
$$

$$
\begin{aligned}
\mathcal{A}^{(1\mathrm{P})(e)}_{FBFBB} &= \tfrac{1}{2}\int_0^\infty d\tau\big(\langle \eta\Phi_E Q\Xi_A(\xi_c b_c)Q\Phi_B\eta\Psi_C\Phi_D\rangle_W \\
&\quad -\langle \eta\Phi_E Q\Xi_A(\xi_c b_c)\Phi_B\eta\Psi_C Q\Phi_D\rangle_W - \langle Q\Phi_E\eta\Psi_A(\xi_c b_c)\eta\Phi_B Q\Xi_C\Phi_D\rangle_W \\
&\quad +\langle Q\Phi_E\eta\Psi_A(\xi_c b_c)\Phi_B Q\Xi_C\eta\Phi_D\rangle_W\big),
\end{aligned} \tag{58e}
$$

Downloaded from http://ptep.oxfordjournals.org/ at Library of Research Reactor Institute, Kyoto University on October 21, 2015

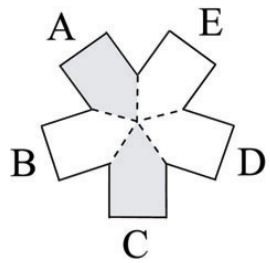

Fig. 13. The NP Feynman diagram for two-fermion–three-boson amplitude with ordering *FBFBB*.

where all the diagrams except for (d) satisfy condition (ii). The slight remnant,

$$\sum_{i=a}^{e}\left(\mathcal{A}^{(2\mathrm{P})(i)}_{FBFBB}\right)\Big|_{\mathrm{extra}}+\sum_{i=a}^{e}\mathcal{A}^{(1\mathrm{P})(i)}_{FBFBB}$$
$$=\tfrac{1}{4}\Big(\big\langle Q\,\Xi_A\Phi_B\eta\Psi_C\Phi_D\Phi_E\big\rangle_W+\big\langle\eta\Psi_A\Phi_B Q\,\Xi_C\Phi_D\Phi_E\big\rangle_W\Big), \tag{59}$$

is cancelled with the contribution

$$\mathcal{A}^{(\mathrm{NP})}_{FBFBB}=-\tfrac{1}{4}\Big(\big\langle Q\,\Xi_A\Phi_B\eta\Psi_C\Phi_D\Phi_E\big\rangle_W+\big\langle\eta\Psi_A\Phi_B Q\,\Xi_C\Phi_D\Phi_E\big\rangle_W\Big) \tag{60}$$

coming from the no-propagator diagram in Fig. 13. As a consequence, the total amplitude with ordering *FBFBB* becomes

$$\begin{aligned}\mathcal{A}_{FBFBB}=\int_0^\infty d^2\tau\Big(&\big\langle\eta\Psi_A Q\Phi_B(\xi_{c_1}b_{c_1})\eta\Psi_C b_{c_2}Q\Phi_D\eta\Phi_E\big\rangle_W\\&+\big\langle Q\Phi_B\eta\Psi_C(\xi_{c_1}b_{c_1})Q\Phi_D b_{c_2}\eta\Phi_E\eta\Psi_A\big\rangle_W+\big\langle\eta\Psi_C Q\Phi_D(\xi_{c_1}b_{c_1})\eta\Phi_E b_{c_2}\eta\Psi_A Q\Phi_B\big\rangle_W\\&+\big\langle Q\Phi_D\eta\Phi_E(\xi_{c_1}b_{c_1})\eta\Psi_A b_{c_2}Q\Phi_B\eta\Psi_C\big\rangle_W+\big\langle\eta\Phi_E\eta\Psi_A(\xi_{c_1}b_{c_1})Q\Phi_B b_{c_2}\eta\Psi_C Q\Phi_D\big\rangle_W\Big),\end{aligned} \tag{61}$$

after eliminating the Ξ. This is again in agreement with that obtained in the CSFT, and therefore gives the well-known on-shell amplitude.

4. Conclusion and discussion

In this paper, we examined the symmetries of the pseudo-action, the action supplemented by the constraint, in the WZW-type open superstring field theory. It was found that the pseudo-action is invariant under the additional symmetries provided we impose the constraint after the transformation. Then we proposed a prescription for the new Feynman rules in the R sector so as to respect these symmetries. According to these new Feynman rules, we explicitly calculated the on-shell four- and five-point amplitudes with the external fermions at the tree level. It was shown that the new rules correctly reproduce the well-known amplitudes in the first quantized formulation.

An important remaining problem is to clarify whether the new Feynman rules proposed in this paper reproduce all the on-shell amplitudes at the tree level. The additional symmetries should play an important role in solving this problem. In order to extend the Feynman rules to those applicable beyond the tree level, we have to fix the gauge symmetries more properly using the Batalin–Vilkovisky method [17,18]. We may have to add a prescription, such as multiplying each fermion loop by 1/2, to solve the problem that may be caused by the duplication of the off-shell fermion. It is also worthwhile studying the off-shell amplitudes and comparing them to those obtained by the rules proposed recently [23].

Downloaded from http://ptep.oxfordjournals.org/ at Library of Research Reactor Institute, Kyoto University on October 21, 2015

Another interesting task is to apply similar considerations to the heterotic string field theory, which was also constructed based on the WZW-type formulation [19–22]. In particular, the pseudo-action for the R sector was similarly constructed at some lower order in the fermion expansion. We proposed the self-dual Feynman rules and showed that they reproduce the on-shell four-point amplitudes [21]. We can similarly investigate, using the fermion expansion, the gauge symmetries of the pseudo-action and propose new Feynman rules. It is interesting to calculate the on-shell five-point amplitudes by the two sets of Feynman rules, and confirm which rules reproduce the expected results.

Acknowledgements

This work was initiated at the workshop on "String Field Theory and Related Aspects VI" held at SISSA in Trieste, Italy. The author would like to thank the organizers, particularly Loriano Bonora, for their hospitality and providing a stimulating atmosphere.

Funding

Open Access funding: SCOAP[3].

References

[1] E. Witten, Nucl. Phys. B **268**, 253 (1986).
[2] S. B. Giddings, E. J. Martinec, and E. Witten, Phys. Lett. B **176**, 362 (1986).
[3] B. Zwiebach, Commun. Math. Phys. **142**, 193 (1991).
[4] M. Saadi, and B. Zwiebach, Annals Phys. **192**, 213 (1989).
[5] T. Kugo, H. Kunitomo, and K. Suehiro, Phys. Lett. B **226**, 48 (1989).
[6] B. Zwiebach, Nucl. Phys. B **390**, 33 (1993). [[arXiv:9206084 [hep-th]] [Search INSPIRE]].
[7] N. Berkovits, Nucl. Phys. B **450**, 90 (1995); **459**, 439 (1996). [erratum] [[arXiv:9503099 [hep-th]].
[8] N. Berkovits, J. High Energy Phys. **0111**, 047 (2001). [[arXiv:0109100 [hep-th]] [Search INSPIRE]].
[9] N. Berkovits, and C. T. Echevarria, Phys. Lett. B **478**, 343 (2000). [[arXiv:9912120 [hep-th]] [Search INSPIRE]].
[10] Y. Michishita: Talk given at "String Field Theory 07", RIKEN, 6–7 October 2007. (Available at http://www.riken.jp/lab-www/theory/sft/sft07_michishita.pdf, date last accessed February 25, 2015).
[11] Y. Michishita: Bulletin of the Faculty of Education, Kagoshima University. Natural Science, **63**, 17, (2012), (in Japanese). (Available at http://hdl.handle.net/10232/14240, date last accessed February 25, 2015).
[12] Y. Michishita, J. High Energy Phys. **0501**, 012 (2005). [[arXiv:0412215 [hep-th]] [Search INSPIRE]].
[13] D. Friedan, E. J. Martinec, and S. H. Shenker, Nucl. Phys. B **271**, 93 (1986).
[14] E. Bergshoeff, R. Kallosh, T. Ortin, D. Roest, A. Van Proeyen, Class. Quant. Grav. **18**, 3359 (2001). [[arXiv:0103233 [hep-th]] [Search INSPIRE]].
[15] H. Fuji, S. Nakayama, and H. Suzuki, J. High Energy Phys. **0701**, 011 (2007). [[arXiv:0609047 [hep-th]] [Search INSPIRE]].
[16] S. B. Giddings, Nucl. Phys. B **278**, 242 (1986).
[17] M. Kroyter, Y. Okawa, M. Schnabl, S. Torii, and B. Zwiebach, J. High Energy Phys. **1203**, 030 (2012). [[arXiv:1201.1761 [hep-th]] [Search INSPIRE]].
[18] S. Torii, J. High Energy Phys. **1204**, 050 (2012). [[arXiv:1201.1762 [hep-th]] [Search INSPIRE]].
[19] Y. Okawa, and B. Zwiebach, J. High Energy Phys. **0407**, 042 (2004). [hep-th/0406212].
[20] N. Berkovits, Y. Okawa, and B. Zwiebach, J. High Energy Phys. **0411**, 038 (2004). [[arXiv:0409018 [hep-th]] [Search INSPIRE]].
[21] H. Kunitomo, Prog. Theor. Exp. Phys. **2014**, 043B01 (2014). [[arXiv:1312.7197 [hep-th]] [Search INSPIRE]].
[22] H. Kunitomo, Prog. Theor. Exp. Phys. **2014**, 093B07 (2014). [[arXiv:1407.0801 [hep-th]] [Search INSPIRE]].
[23] A. Sen, [arXiv:1408.0571] hep-th.

Downloaded from http://ptep.oxfordjournals.org/ at Library of Research Reactor Institute, Kyoto University on October 21, 2015