# Study on Surface Electricity. (XXII)

## On the Differential Capacity of the Adsorbed Layer of Nonionic Surface Active Agents. (1)

Shizuo UEDA, Fukuju TSUJI and Akira WATANABE*

(Tachi Laboratory, Institute for Chemical Research, Kyoto University)

*Received December 23, 1959*

The adsorption behaviour of the condensation polymers of ethylene oxides and lauryl alcohol was studied by measuring the differential capacity of the electrical double layers at interfaces between mercury and solutions containing these nonionic surface active agents. The a.c. bridge method using a dropping mercury electrode was used for the measurements at the a.c. frequency of 3,900 c/s. The primitive solution was 1 $M$ $Na_2SO_4$, except when a comparison was made by using 1 $M$ KCl.

It was found that the complete monomolecular adsorption layer was formed on the mercury surface at the surface active agent concentrations of $10^{-4}$ and $5\times10^{-5}$ $M$ for the mole numbers of the ethylene oxides of 8.2 and 25, respectively. The differential capacity against the polarisation potential curves showed two well defined desorption peaks in the anodic and cathodic polarisation potentials, although in the case of 1 $M$ KCl used as the primitive solution the anodic peak was masked by the strong specific adsorption of the chloride ions.

At lower surface active agent concentrations, the monomolecular layer was not complete and the deviation from the curve for the primitive solution became smaller at lower surface active agent concentrations.

### INTRODUCTION

It is a well known fact that the interfacial tension of a salt solution containing an organic material is very often lower than that of the primitive solution, a salt solution without the organic material. The relation between the change in the interfacial tension, $d\gamma$, and the surface excess of the organic material, $\Gamma$, is given by the Gibbs' adsorption equation,[1] *viz.*

$$d\gamma = -\sum \Gamma d\mu - q d\varphi \qquad (1)$$

where $\mu$ is the chemical potential of the organic material and $q$ and $\varphi$ are the surface charge density and the polarisation potential of the surface. It is clear from this equation that if $\Gamma$ is positive, $d\gamma$ is negative, which means the depression of the surface tension; such materials are called surface active agents.

The adsorption behaviour of surface active agents is usually examined by the concentration dependence of the interfacial properties, *i.e.* dependence on $\mu$ in equation (1). However, it is clear from this equation that the electrical

* 上田静男, 辻 福寿, 渡 辺昌

term can also be changed; for an inert metal phase, *e.g.* a mercury electrode, in contact with a surface active agent solution, the electrical field strength in the interfacial electrical double layer can also be changed within a certain range defined by the deposition potentials of various electrochemically active ions.[1] This can be performed by applying a polarising potential $\varphi$ from an external circuit and hence by changing the charge density of the mercury surface, $q$. This means that the number of the independent variables is increased by one as compared with the case of air/solution interfaces.

Although the effect of the polarisation potential on adsorption can be studied from the direct measurements of the electrocapillary curves, it is more common in practice to use differential capacity measurements of the double layer; surface tension measurements are usually very difficult to perform, and the analysis of the double layer capacity, $C$, *vs.* $\varphi$ curves gives much more accurate information than that of the electrocapillary curves.[2]

In the presence of surface active agents, the surface charge of a mercury electrode is a function of the surface excess of this material and the other ionic species in solution. Hence, the differential capacity of the double layer, which is the ratio of the change in the charge density and the applied a.c. potential, contains an extra term due to $d\Gamma/dt$ in addition to a term standing for the ionic double layer capacity.[3,4]

It appears helpful to give a short description on the various methods of capacity measurements at mercury/solution interfaces, before giving the experimental results obtained by using surface active agent solutions.

## VARIOUS METHODS OF CAPACITY MEASUREMENTS

### a) The Impedance Matching Method using U-effect II

The mechanical disturbance of the electrical double layer of the mercury/solution interface in a glass capillary induces generation of an alternating voltage having the same wave character as that of the mechanical vibration. This effect has been called by the present authors "U-effect II".[5]

According to the theory of U-effect II,[6,7] the a.c. current of the circuit produced by this effect, **I**, is given by the following equation:-

$$\mathbf{I}=\frac{\mathbf{V}}{(R_0+R)+j[X-1/(\omega C)]} \qquad (2)$$

where $R_0$ is the inner resistance of the glass capillary element, mainly the solution resistance, $C$ the total interfacial double layer capacity, $\omega$ the circular frequency of vibration, $R$ and $X$ are the resistance and reactance of the load, and **V** is the electromotive force of U-effect II, which is a function of the amplitude of vibration and the polarisation of the mercury surface.

In the case of a resistive load at constant values of the amplitude of vibration and polarisation, we can take $X=0$ in equation (2). The power $W$ supplied to the load is, therefore, given by the following equation:-

$$W=I^2R=\frac{V^2R}{(R_0+R)^2+1/(\omega C)^2}, \qquad (3)$$

where $I$ and $V$ are the moduli of **I** and **V**, respectively.

The condition of the maximum power supply, when $R$ is changed, is given by taking $\partial W/\partial R=0$. Hence

$$R_0^2+1/(\omega C)^2=R^2. \tag{4}$$

This equation gives the condition of "impedance matching", which has been used for the measurements of double layer capacities.[8]

In Fig. 1 the block diagram of the circuit of this measurement is shown. The mercury/solution interface in the capillary element of U-effect II, C, is

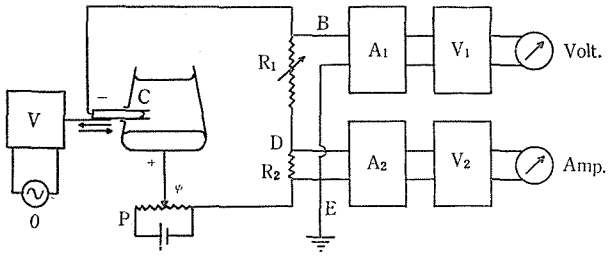


Fig. 1. Block diagram of the impedance matching method for the double layer capacity measurements at mercury/solution interfaces. V, Vibrator ; O, Oscillator ; $A_1$, $A_2$, Amplifiers ; $V_1$-Volt, $V_2$-Amp, Valve voltmeters ; $R_1$, Variable resistance ; $R_2$, Resistance ; P, Potentiometer ; C, Capillary element

forced to vibrate by the mechanical vibration of the vibrator, V, driven by an oscillator, 0. The polarisation, $\varphi$, of this interface against the large mercury pool electrode is defined by a potentiometer, P. The load resistance of this circuit is the sum of $R_1$, $R_2$ and the inner resistance of the potentiometer ; the last term is usually very small as compared with the first two terms. If $R_1$ is increased from 0 to a very large value, the power supplied to the load, $R_1+R_2$, which is the product of the current of the circuit and the voltage between B and E, has a maximum value when equation (4) is fulfilled. The voltage between B and E can be measured by the reading of the voltmeter, $V_1$- Volt, while the current by the potential difference between D and E, since $R_2$ is maintained constant; actually this can be measured by the reading of the voltmeter, $V_2$- Amp. $A_1$ and $A_2$ are the amplifiers.

It is easy to calculate the capacity value of the interface from this condition, when an appropriate equivalent circuit is assumed for the inner impedance of the capillary element, *e.g.* a series combination of $R_0$ and $C$.

### b) The Resonance Method using a Dropping Mercury Electrode

The principal circuit of this method consists of a dropping mercury electrode, equivalent circuit of which is considered to be a series combination of the double layer capacity, $C$, and the solution resistance, $R_0$, an inductive load, $L$, and a small resistance $R$ by which a small a.c. voltage, $E$, is fed, *vide* Fig. 2. As the total capacitance of the dropping mercury electrode increases

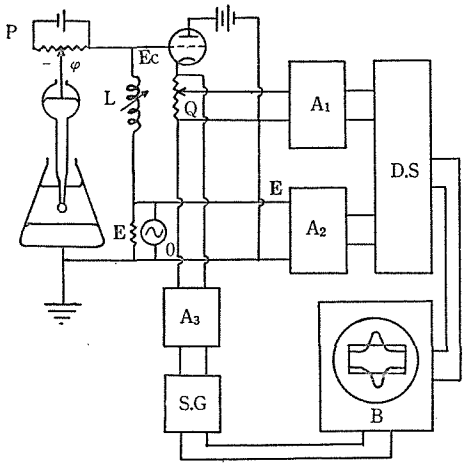


Fig. 2. Block diagram of the resonance method using a dropping mercury electrode for the double layer capacity measurements at mercury/solution interfaces. O, Oscillator ; P, Potentiometer ; L, Variable inductance ; $A_1$, $A_2$, Amplifiers ; $A_3$, Tuned Amplifier ; SG, Sweep generator ; DS, Dual scoper ; B, Oscilloscope ; Q, Cathode resistance (Potentiometer)

with the growth of drop,[9] the a.c. potential difference between the two ends of the load, $E_c$, has its maximum value at a certain instant during the dropping period, when the following resonance condition is satisfied[10] :-

$$\frac{1}{\omega C}=\frac{\omega L}{2}\left(1+\left(\frac{4R_t^2}{\omega^2L^2}\right)^{\frac{1}{2}}\right), \tag{5}$$

$$Q_{max}=\frac{E_c^{max}}{E}=\frac{\omega L}{2R_t}\left(1+\left(1+\frac{2R_t^2}{\omega^2L^2}\right)^{\frac{1}{2}}\right), \tag{6}$$

where $R_t=R+R_0$. The capacity per unit area, $c$, can, therefore, be calculated from the time of resonance and the value of the load inductance or the frequency of the a.c. voltage ; the interfacial area at the time of resonance can be worked out from the rate of growth of the drop.

In practice, the a.c. potential, $E_c$, is fed to the vertical axis of a cathode ray oscilloscope after amplification. As a sawtooth wave sweep voltage synchronized with the drop growth is fed to the horizontal axis of the oscilloscope at the same time, a trace can be observed on the screen of the oscilloscope, giving a typical resonance curve at each period of the drop growth. If the frequency or the load, $L$, is properly adjusted, the resonance occurs at a definite position of the time axis.

It is also possible to measure the $Q_{max}$ value of the interface by the ratio of the heights of the traces on the screen standing for the two voltages, $E_c$ and $E$. In the present experiments this can be made by adjusting the potentiometer, Q ; the amplifiers $A_1$ and $A_2$ have the same amplifications. SG in the figure is a generator of the sawtooth sweep voltage to be fed to the horizontal axis of the oscilloscope ; the sweep is initiated by the pulse voltage

produced when the drop falls. $A_3$ is a tuned amplifier for feeding the pulse to the sweep generator.

### c) The Bridge Method using a Dropping Mercury Electrode

This method has been used for the first time by Grahame[11] and appears to be one of the most accurate methods for capacity measurements of mercury/solution interfaces. The principle is nothing but the usual Kohlrausch bridge. However, as the surface area of the drop is continuously increasing with the drop growth, the same device of synchronizing must be used as that of section b).

In Fig. 3 the block diagram of the circuit is given. By adjusting $C_s$ and $R_s$, so as for the bridge zero point to come to a definite position of the time axis of the oscilloscope, the capacity value and the equivalent series resistance

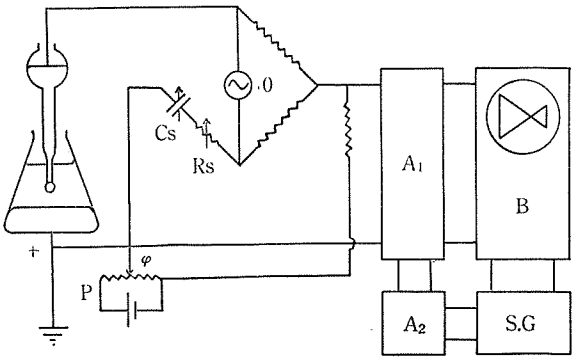


Fig. 3. Block diagram of the bridge method using a dropping mercury electrode for the double layer capacity measurements at mercury/solution interfaces. O, Oscillator ; P, Potentiometer ; $A_1$, Amplifier; $A_2$, Tuned amplifier ; SG, Sweep generator ; B, Oscilloscope ; $C_s$, Variable condenser ; $R_s$, Variable resistance

of the cell per unit interfacial area can be calculated. This method has been checked by the present authors to be applicable to the case of the electrolyte concentration as low as *ca.* $10^{-4}$ *M*.[12]

## EXPERIMENTAL

### a) Material

The nonionic surface active agents used were the condensation polymers of ethylene oxides and lauryl alcohol, L.A. (et. 0.)$_x$, where $x$ is the mole number of ethylene oxides. In the present experiments, the polymers with $x$ of 8.2 and 25 were used. It is considered that they form ether linkages.

The sodium sulphate and potassium chloride were of superior qualities.

Conductivity water was used for all experiments ; the pure water, obtained by passing through an ion exchange resin column, was distilled by using a tin condenser.

**b) Method of Measurements**

The bridge method using a dropping mercury electrode was used for the capacity measurements, see previously.

Standard non-inductive resistance boxes (600$\Omega$ each) were used for the two balancing arms of the bridge. The compensation arm of the bridge, $C_s$ and $R_s$, consisted of a variable non-loss standard mica condenser, with a maximum capacitance of 11.111 $\mu$F and divisions of 0.0001 $\mu$F, and a standard non-inductive resistance box with a maximum resistance of 100 K$\Omega$ and divisions of 1 $\Omega$. The oscillator was a usual CR valve oscillator and an a.c. voltage of 12 mV was fed to the bridge; the frequency used was 3,900 c/s. The maximum value of the d.c. polarising potential $\varphi$ varied from solution to solution, depending on the deposition potentials of the ionic species in the solution; it was usually from *ca.* +0.2 to −2.2 V.

The dropping mercury electrode was thermostated to 30±0.05°C. The mercury head was 72.5 cm. and the drop period was 4 sec. for $\varphi=0$, with the dropping rate of 0.0007 g./sec. In the present experiments, the bridge zero point was adjusted to the position of the time axis corresponding to 1.8 sec. after the drop started; the interfacial area at this instant was calculated to be 0.0110 cm$^2$. Dissolved oxygen in the solution was removed by hydrogen.

## RESULTS AND DISCUSSION

**a) L.A. (et. 0.)$_{8\cdot2}$ in 1 *M* $Na_2SO_4$**

In the presence of the organic surface active agent, the surface charge of a mercury electrode is a function of the surface excess of this material and the other ionic species in solution. Hence, the differential capacity of the double layer, which is the ratio of the change in the charge density and the applied a.c. potential, contains an extra term due to $d\Gamma/dt$ in addition to a term standing for the ionic double layer capacity.[3,13]

At a proper value of the polarising potential, *i.e. ca.* −0.5 V *vs.* normal calomel electrode, the surface tension has a maximum value (ecm), and the surface charge density, $q$, becomes zero. The electrostatic field strength in the electrical double layer is, therefore, almost zero, and hence the organic molecules are adsorbed by virtue of the chemical force only, and accumulate at the interfacial phase; this force is characteristic for the molecules. It is assumed that this adsorption layer is usually of the thickness of the so called "monomolecular layer" over a certain concentration range of the organic material.

If the polarisation potential is increased in the positive or negative direction, the field strength increases and an interaction becomes operative between this field and the permanent or induced dipoles of the molecules. As this force effects in the opposite direction from the chemical force mentioned above, a decrease in adsorption is expected.

In the case of a very large positive or negative polarisation, the adsorption

of molecules disappears completely and the electrical double layer consists of the ionic species of the primitive solution and water only.

The differential capacity per unit area, $c$, *vs.* $\varepsilon$ curves for the L.A. (et. O.)$_{8.2}$ concentrations of $10^{-5}$, $2.5\times10^{-5}$, $5\times10^{-5}$, $10^{-4}$ and $10^{-3}$ $M$ are given in Fig. 4, where $\varepsilon$ is the polarisation potential of the dropping mercury electrode with reference to the electrocapillary maximum; when $\varepsilon=0$, $q$ equals zero.

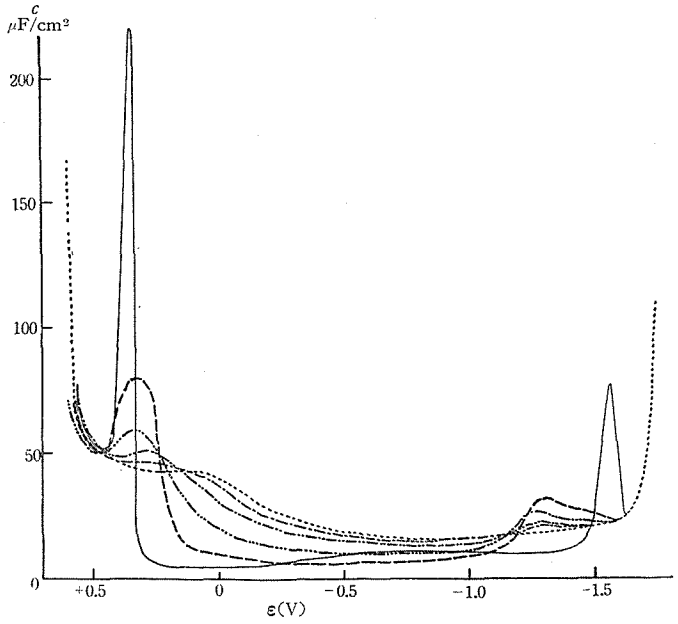


Fig. 4. Differential capacity *vs.* potential curves for L.A.(et. O.)$_{8.2}$ in 1 $M$ $Na_2SO_4$.

| Surface active agent concn., $M$. | | Surface active agent concn., $M$. | |
|---|---|---|---|
| ····· | 0 | — ··· — | $5\times10^{-5}$ |
| • — • — | $10^{-5}$ | — — — | $10^{-4}$ |
| — · · — | $2.5\times10^{-5}$ | ——— | $10^{-3}$ |

It is clear from the curve for $10^{-5}$ $M$ that adsorption of the surface active agent is already occurring at such a small concentration. However, since the deviation from the curve for the primitive solution is relatively small, it can be concluded that the adsorption layer is still far from completion. It is supposed from the curves that the complete coverage of the mercury surface occurs at the surface active agent concentration higher than $10^{-4}$ $M$.

It is clear from the curves at higher concentrations that they have two well defined peaks. This is characteristic for the adsorption of surface active materials and can be explained as follows[3]; a complete monomolecular layer of the surface active agent is formed in the range between the two peaks, *i.e.* $\Gamma=\Gamma_{max}$, but in the both ranges external to the two peaks, this layer is absent, *i.e.* $\Gamma=0$. Hence, $d\Gamma/dt=0$ in these three regions of polarisation. However, in the neighbourhood of the polarisation potential where the transition occurs

from $\Gamma=0$ to $\Gamma=\Gamma_{max}$, $d\Gamma/dt$ has a very large value, giving rise to peaks in the $c$ *vs.* $\varepsilon$ curve ; these peaks are, therefore, called "desorption peaks".

It is concluded from the curves in Fig. 4 that the higher the surface active agent concentration, the higher and the sharper are the peaks and the larger is the distance between the two peaks.

It is considered that the flat minimum of the $c$ *vs.* $\varepsilon$ curves between the two peaks is due to the formation of a monomolecular layer on the surface of the dropping mercury electrode. However, this layer is not complete at the L.A. (et. 0.)$_{8.2}$ concentration lower than $10^{-4}$ $M$, although the deviation of the curve from that for the primitive solution is apparent even at $10^{-5}$ $M$, showing the occurrence of incomplete monomolecular adsorption. The deviation becomes larger, when the concentration is increased, and the $c$ *vs.* $\varepsilon$ curve appears to converge to a final shape standing for the complete monomolecular adsorption.

It must be mentioned here that the reproducibility of capacity measurements is rather poor at concentrations at which monolayer adsorption is incomplete ; this will probably be due to the fact that, at these concentrations, the diffusion velocity of the molecules towards the interface is comparable with the rate of growth of the mercury drop and hence stationary capacity values are difficult to be obtained. Hence, a quantitative conclusion cannot be drawn from measurements at low concentrations like $10^{-5}$ $M$, although the above mentioned conclusion would be correct in principle.

A slight hump can be observed in the adsorption region for the L.A. (et.

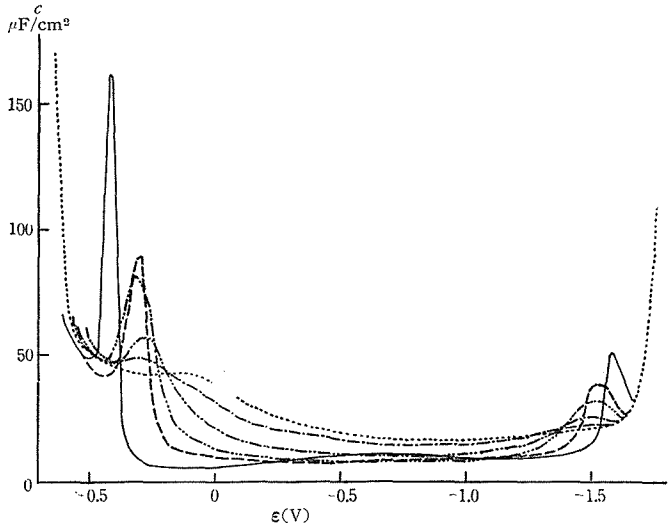


Fig. 5. Differential capacity *vs.* potential curves for L. A. (et. O.)$_{25}$ in 1 $M$ $Na_2SO_4$.

| Surface active agent concn., $M$. | | Surface active agent concn., $M$. | |
|---|---|---|---|
| ····· | 0 | —··— | $5\times10^{-5}$ |
| •—•— | $10^{-5}$ | — — — | $10^{-4}$ |
| —··— | $2.5\times10^{-5}$ | ——— | $10^{-3}$ |

$0.)_{8.2}$ concentration of $10^{-3}$ *M*. This appears to be due to a small change in the adsorption mechanism at this potential range, see later.

**b) L.A. (et. 0.)$_{25}$ in 1 *M* $Na_2SO_4$**

The *c vs.* ε curve for the L.A. (et. 0.)$_{25}$ concentrations of $10^{-5}$, $2.5\times10^{-5}$, $5\times10^{-5}$, $10^{-4}$ and $10^{-3}$ *M* are given in Fig. 5. These curves were obtained under the same conditions as those in section a). Although the curves show similar general behaviours, some differences are noticed; the distance between the peaks is larger in the case of L.A. (et. 0.)$_{25}$ than in the case of L.A. (et. 0.)$_{8.2}$. The capacity of the monomolecular adsorption layer is larger for the latter than for the former, if we compare the curves corresponding to the same concentration. It can also be noticed that the monomolecular layer become complete at the surface active agent concentration of $5\times10^{-5}$ for the former and $10^{-4}$ *M* for the latter; the capacity values under these conditions are both *ca.* 6~8 μF/cm². It can be concluded from these observations that the adsorbability to the mercury surface is larger for the former than for the latter material.

**c) L.A. (et. 0.)$_{25}$ in 1 *M* KCl**

It was mentioned in sections a) and b) that the peaks at the anodic side were due to the exchange of the adsorbed surface active molecules by sulphate ions in the primitive solution. In order to examine this statement, a series of experiments have been made by using KCl solution as the primitive solution; it has already been proved that the adsorption of chloride ions on to the mercury surface was very large as compared with that of the sulphate ions[10].

In Fig. 6 a *c vs.* ε curve at the L.A. (et. 0.)$_{25}$ concentration of $2.5\times10^{-5}$ *M*

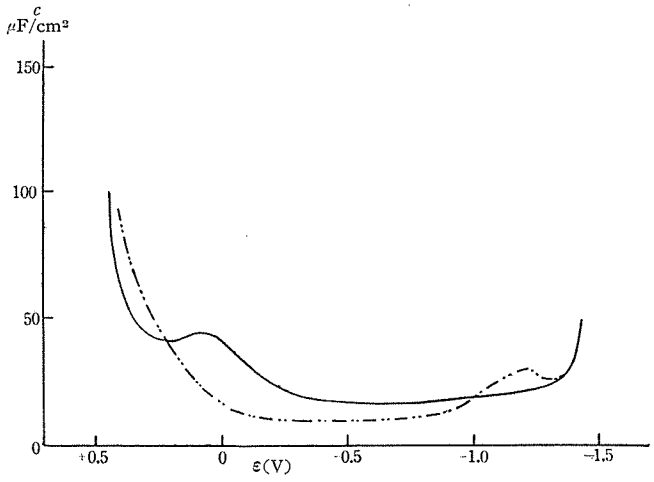


Fig. 6. Differential capacity *vs.* potential curve for L. A. (et. O.)$_{25}$ in 1 *M* KCl.

Surface active agent concn., *M*.

——— 0 —··— $2.5\times10^{-5}$

is given as an example showing the effect of the chloride ions. It is clear that, although, as expected, the capacity behaviour at the cathodic region is the same as in the case of section b), the desorption peak at the anodic region is completely masked by the specific adsorption of the chloride ions.

## CONCLUSION

The adsorption behaviour of L.A. (et. 0.)$_x$, nonionic surface active agents, on the dropping mercury electrode was studied by measuring the differential double layer capacity using an a.c. bridge method. 1 $M$ $Na_2SO_4$ solutions were used as the primitive solutions, except when a comparison was made by using 1 $M$ KCl. The concentrations of the surface active agents were from $10^{-5}$ to $10^{-3}$ $M$ and measurements were made with the a.c. frequency of 3,900 c/s and at 30°C.

The capacity of the mercury electrode was measured at 1.8 sec. after the drop growth started. It is important to mention here that the capacity per unit interfacial area is not constant but is a function of time; especially, for low surface active agent concentrations, this change in capacity with time is very large. Such a phenomenon has never been reported, and it appears that the time of the drop growth when the measurements are made must be described clearly in the capacity data.

In the case of 1 $M$ $Na_2SO_4$ used as the primitive solution, well defined desorption peaks were obtained at $\varepsilon$ values of +0.3 and −1.5 V, indicating very large $d\Gamma/dt$. However, in the case of 1 $M$ KCl used as the primitive solution, the desorption peak at the anodic side could not be identified, owing to the specific adsorption of chloride ions.

For $\varepsilon$ values in the adsorption layer region, the monomolecular adsorption becomes complete at the L.A. (et. 0.)$_{8.2}$ concentrations higher than $10^{-4}$ $M$ and at the L.A. (et. 0.)$_{25}$ concentrations higher than $5\times10^{-5}$ $M$. At lower surface active agent concentrations, the monomolecular layer is not complete and the deviation of the $c$ *vs.* $\varepsilon$ curve from that for the primitive solution becomes smaller at lower surface active agent concentrations.

At the L.A. (et. 0.)$_{25}$ concentration of $10^{-3}$ $M$, slight increase in the capacity values at adsorption region was observed. This appears to be due to the fact that, owing to the micelle formation at such high concentrations, penetration of the sodium ions into the adsorption layer becomes possible and induces an increase in the capacity value.

The general capacity behaviours of L.A. (et. 0.)$_{8.2}$ and L.A. (et. 0.)$_{25}$ were the same. It was concluded from the comparison of the $c$ *vs.* $\varepsilon$ curves that the adsorbability of the latter was larger than that of the former.

The authors wish to express their gratitude to Professor I. Tachi, Faculty of Agriculture in Kyoto University, for his continued interest and encouragement. Thanks are also due to Dr. S. Tomiyama, Director of the Research Division of the Lion Fats and Oils Co., for the supply of L.A. (et. 0.)$_{8.2}$ and

to Professor R. Gotoh of this Institute for the supply of L.A. (et. 0.)$_{25}$.

## REFERENCES

(1) A. Watanabe and S. Ueda, *J. Electrochem. Soc., Japan*, 27, 247, 308, 358, 419 (1952).
(2) S. Ueda and A. Watanabe, "Textbook of Experimental Chemistry," Maruzen, 7, 386 (1956).
(3) W. Lorenz and F. Möckel, *Z. Elektrochem.*, 60, 507 (1956).
(4) M. Senda, *J. Electrochem. Soc., Japan*, 27, 71 (1959).
(5) S. Ueda, A. Watanabe and F. Tsuji, This Bulletin, 20, 28 (1950), *J. Electrochem. Soc., Japan*, 19, 142 (1951).
(6) S. Ueda, A. Watanabe and F. Tsuji, *Proceedings of the Second Intern. Congr. of Surface Activity, Electrical Phenomena*, page 2 (1957).
(7) S. Ueda, A. Watanabe and F. Tsuji, This Bulletin, 31, 249 (1953), *Mem. Coll. Agr., Kyoto Univ.*, 67, 73 (1954).
(8) S. Ueda, A. Watanabe and F. Tsuji, This Bulletin, 25, 30 (1951), 29, 32 (1952), *J. Electrochem. Soc., Japan*, 21, 390 (1953), *Mem. Coll. Agr., Kyoto Univ.*, 67, 69 (1954); A. Watanabe, F. Tsuji, K. Nishizawa and S. Ueda, *J. Electrochem. Soc., Japan*, 22, 179 (1654), This Bulletin, 31, 249 (1953), *Mem. Coll. Agr., Kyoto Univ.*, 67, 73 (1954).
(9) G. S. Smith, *Trans. Faraday Soc.*, 47, 63 (1951).
(10) A. Watanabe, F. Tsuji and S. Ueda, This Bulletin, 33, 91 (1955), 34, 1, 65 (1956), *J. Electrochem. Soc., Japan*, 22, 521 (1954), *Proceedings of the Second Intern. Congr. Surface Activity, Electrical Phenomena*, page 94 (1957).
(11) D. C. Grahame, *J. Am. Chem. Soc.*, 63, 1207 (1941), 68, 301 (1946).
(12) S. Ueda, F. Tsuji and A. Watanabe, to be published.
(13) A. Frumkin, *Z. Physik*, 35, 792 (1926); Melik-Gaikazyan, *J. Physic. Chem., USSR*, 26, 560 (1952); D. C. Grahame, *Chem. Rev.*, 41, 441 (1947).